PRODUCT DATA SHEET

Delta Bespoke 800 Series – Dual V3 (800.1250)

BASEMENT DRAINAGE & PROTECTION

Description

The Delta Bespoke 800 Series of Package Pumping Station are available in depths from 1250mm to 2000mm and with varying pumping capabilities from the Delta Single V3 Foul to powerful Delta Dual V6 pump.

The robust and reliable Delta Bespoke 800 Series – Dual V3 (800.1250) Packaged Pumping Station has been specifically designed to collect ground and surface water from basements, below ground structures.

Typical applications include (but are not limited to) Type C, Cavity Drained Waterproofing solutions and/or surface water from roofs, buried roofs, terraces and patios (subject to selection criteria).

Delta Bespoke 800 Series – Dual V3 (800.1250) system includes: a polyethylene chamber, 1¼" PVC internal pipework, two Delta V3 sump pumps, 110mm inlet, 50mm cable duct, 110mm vent and 2" discharge. This product is specifically designed for below ground applications where hydrostatic water pressure may be present.

We recommend surrounding the Delta Bespoke 800 Series – Dual V3 with concrete to prevent movement. An access cover is not supplied, as these are generally site specific and installed in the final finish. If required, the chamber will accept a standard 450mm x 600mm cover and frame. Inlets can easily be drilled and sealed on site, making this product straightforward to install.

The Delta Bespoke 800 Series – Dual V3 (800.1250) is not suitable for collecting foul water.

Features

- Suitable for ground, surface, storm, and grey water applications
- Large chamber, manufactured from superior polyethylene enabling the – Delta Dual V3 (800.1250) to withstand hydrostatic forces encountered in applications with high water tables
- Flow rate up to 2.9 l/s
- Quick and simple installation
- Supplied with two powerful Delta Dual V3 Pumps
- Suitable for residential, commercial, health care/learning institution and heritage projects

Product details

DMS V3.800.1250

Specification

- NBS Specification R18 (Clause 310) Pumping Stations and Pressure Pipelines
- BS 8102:2022 Type C Drained Protection

Associated products

- Battery backup systems
- High-level alarms
- Remote monitoring
- External pipework
- Pumps
- Access covers
- Additional inlets

NBS Source

Delta House, Merlin Way, North Weald, Epping, Essex, CM16 6HR
01992 523 523 | info@deltamembranes.com | www.deltamembranes.com

PRODUCT DATA SHEET

Delta Bespoke 800 Series – Dual V3 (800.1250)

Technical data

PUMP SPECIFICATIONS

Pump type	V3 Submersible Pump
Pump type	Vortex
Control	Automatic
Power supply	230 VAC
Rated current	1.9 A
Motor rating (P2)	180 W
Revs per min.	2800 rpm
Discharge size	1¼"
Free passage	10 mm
Max. vertical	6.8 m
Max. flow rate	2.9 l/s
Max liquid temp.	<40 °C
Cable length	10 m
Weight	5.2 kg

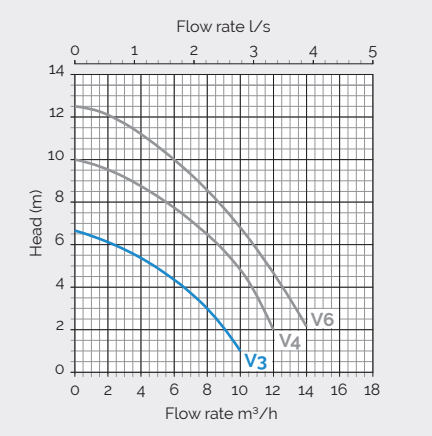

CHAMBER SPECIFICATIONS

Chamber	800.1250
Material	Tank-grade polyethylene
Dimensions	900 mmØ x 1250 mmH
Clear opening	600 mm x 450 mm
Inlet	110 mm
Internal pipework	1¼" PVC Class E
Discharge	2" PVC Class E
Cable duct	50 mm
Vent duct	110 mm

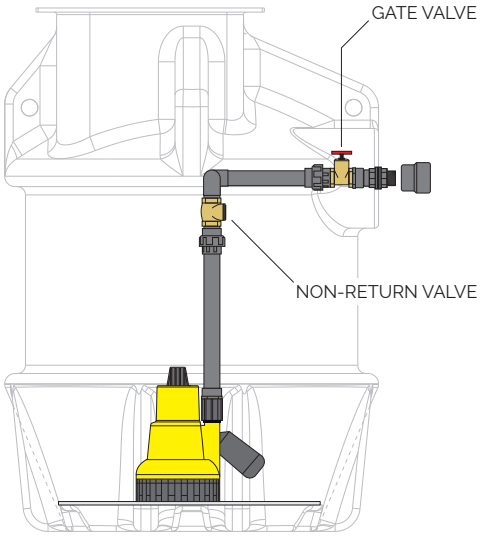

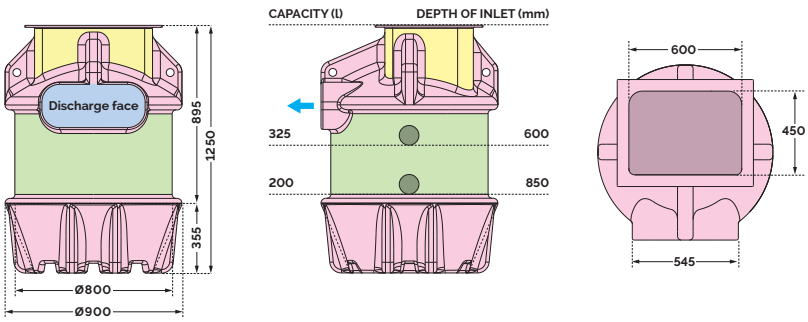

POSITIONING CONNECTIONS

Discharge only	Inlet location allowed	Cable ducts and vents only	No drilling allowed

Other information

All data and information contained in these Product/Technical Data Sheets is up-to-date and correct as at the date of issue. The information given is suggested as guidance and should only be used for evaluating your specific application. Delta Membrane Systems Limited cannot control or anticipate the conditions under which this product may be used, each user should review the information in specific context of the planned use. The information contained in these Product/Technical Data Sheets should not be considered a warranty, expressed, or implied, including but not limited to a warranty of merchantability or fitness for a particular purpose. In no event shall Delta Membrane Systems Limited be liable for any incidental or consequential damages resulting from the use, misuse, or inability to use the product. This exclusion applies regardless of whether such damages are sought based on breach of warranty, breach of contract, negligence, strict liability in tort, or any other legal theory. When in doubt, contact Delta's Technical Team on 01992 523 523.

Delta House, Merlin Way, North Weald, Epping, Essex, CM16 6HR
01992 523 523 | info@deltamembranes.com | www.deltamembranes.com

PRODUCT DATA SHEET

Delta Bespoke 800 Series – Dual V3 (800.1500)

BASEMENT DRAINAGE & PROTECTION

Description

The robust and reliable Delta Bespoke 800 Series – Dual V3 (800.1500) Packaged Pumping Station has been specifically designed to collect ground and surface water from basements, below ground structures.

Typical applications include (but are not limited to) Type C, Cavity Drained Waterproofing solutions and/or surface water from roofs, buried roofs, terraces and patios (subject to selection criteria).

Delta Bespoke 800 Series – Dual V3 (800.1500) system includes: a polyethylene chamber, 1¼" PVC internal pipework, two Delta V3 sump pumps, 110mm inlet, 50mm cable duct, 110mm vent and 2" discharge. This product is specifically designed for below ground applications where hydrostatic water pressure may be present.

We recommend surrounding the Delta Bespoke 800 Series – Dual V3 with concrete to prevent movement. An access cover is not supplied, as these are generally site specific and installed in the final finish. If required, the chamber will accept a standard 450mm x 600mm cover and frame. Inlets can easily be drilled and sealed on site, making this product straightforward to install.

The Delta Bespoke 800 Series of Package Pumping Station are available in depths from 1250mm to 2000mm and with varying pumping capabilities from the Delta Single V3 Foul to powerful Delta Dual V6 pump.

The Delta Bespoke 800 Series – Dual V3 (800.1500) is not suitable for collecting foul water.

Features

- Suitable for ground, surface, storm, and grey water applications
- Large chamber, manufactured from superior polyethylene enabling the – Delta Dual V3 (800.1500) to withstand hydrostatic forces encountered in applications with high water tables
- Flow rate up to 2.9 l/s
- Quick and simple installation
- Supplied with two powerful Delta Dual V3 Pumps
- Suitable for residential, commercial and heritage projects

Product details

DMS V3.800.1500

Specification

- NBS Specification R18 (Clause 310) Pumping Stations and Pressure Pipelines
- BS 8102:2022 Type C Drained Protection

Associated products

- Battery backup systems
- High-level alarms
- Remote monitoring
- External pipework
- Pumps
- Access covers
- Additional inlets

NBS Source

Delta House, Merlin Way, North Weald, Epping, Essex, CM16 6HR
01992 523 523 | info@deltamembranes.com | www.deltamembranes.com

PRODUCT DATA SHEET

Delta Bespoke 800 Series – Dual V3 (800.1500)

Technical data

PUMP SPECIFICATIONS

Pump type	V3 Submersible Pump
Pump type	Vortex
Control	Automatic
Power supply	230 VAC
Rated current	1.9 A
Motor rating (P2)	180 W
Revs per min.	2800 rpm
Discharge size	1¼"
Free passage	10 mm
Max. vertical	6.8 m
Max. flow rate	2.9 l/s
Max liquid temp.	<40 °C
Cable length	10 m
Weight	5.2 kg

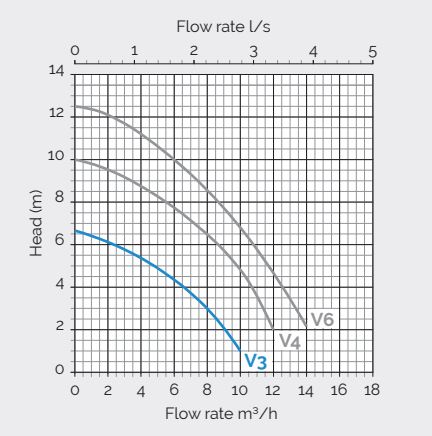

CHAMBER SPECIFICATIONS

Chamber	800.1500
Material	Tank-grade polyethylene
Dimensions	900 mmØ x 1500 mmH
Clear opening	600 mm x 450 mm
Inlet	110 mm
Internal pipework	1¼" PVC Class E
Discharge	2" PVC Class E
Cable duct	50 mm
Vent duct	110 mm

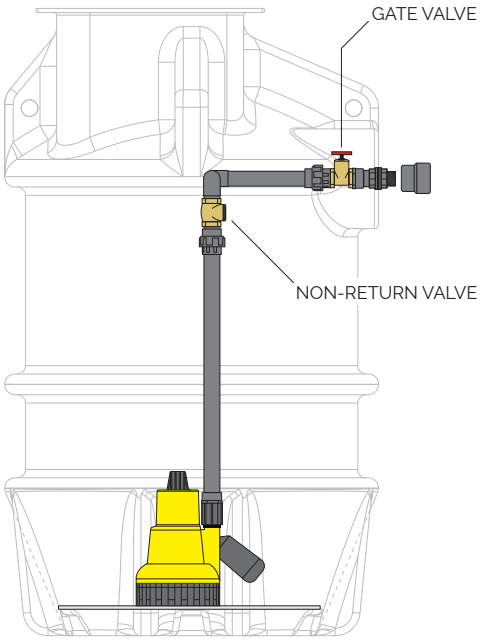

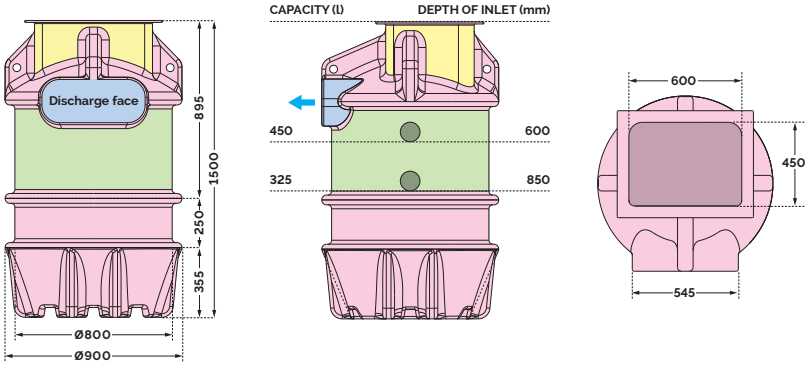

POSITIONING CONNECTIONS

Discharge only	Inlet location allowed	Cable ducts and vents only	No drilling allowed

Other information

All data and information contained in these Product/Technical Data Sheets is up-to-date and correct as at the date of issue. The information given is suggested as guidance and should only be used for evaluating your specific application. Delta Membrane Systems Limited cannot control or anticipate the conditions under which this product may be used, each user should review the information in specific context of the planned use. The information contained in these Product/Technical Data Sheets should not be considered a warranty, expressed, or implied, including but not limited to a warranty of merchantability or fitness for a particular purpose. In no event shall Delta Membrane Systems Limited be liable for any incidental or consequential damages resulting from the use, misuse, or inability to use the product. This exclusion applies regardless of whether such damages are sought based on breach of warranty, breach of contract, negligence, strict liability in tort, or any other legal theory. When in doubt, contact Delta's Technical Team on 01992 523 523.

NBS Source

PRODUCT DATA SHEET

Delta Bespoke 800 Series – Dual V3 (800.1750)

BASEMENT DRAINAGE & PROTECTION

Description

The Delta Bespoke 800 Series of Package Pumping Station are available in depths from 1250mm to 2000mm.

The heavy-duty Delta Bespoke 800 Series – Dual V3 (800.1750) Packaged Pumping Station has been specifically designed to collect ground and surface water from basements, below ground structures.

Typical applications include Type C, Cavity Drained Waterproofing solutions and/or surface water from roofs, buried roofs, terraces and patios (subject to selection criteria).

Delta Bespoke 800 Series – Dual V3 (800.1750) system includes: a polyethylene chamber, 1¼" PVC internal pipework, two Delta V3 sump pumps, 110mm inlet, 50mm cable duct, 110mm vent and 2" discharge. This product is specifically designed for below ground applications where hydrostatic water pressure may be present. We recommend surrounding the Delta Bespoke 800 Series – Dual V3 with concrete to prevent movement. An access cover is not supplied, as these are generally site specific and installed in the final finish.

If required, the chamber will accept a standard 450mm x 600mm cover and frame. Inlets can easily be drilled and sealed on site, making this product straightforward to install.

The Delta Bespoke 800 Series – Dual V3 (800.1750) is not suitable for collecting foul water.

Features

- Suitable for ground, surface, storm, and grey water applications
- Large chamber, manufactured from superior polyethylene enabling the – Delta Dual V3 (800.1250) to withstand hydrostatic forces encountered in applications with high water tables
- Flow rate up to 2.9 l/s
- Quick and simple installation
- Supplied with two powerful Delta Dual V3 Pumps
- Suitable for residential, commercial and heritage projects

Product details

DMS V3.800.1750

Specification

- NBS Specification R18 (Clause 310) Pumping Stations and Pressure Pipelines
- BS 8102:2022 Type C Drained Protection

Associated products

- Battery backup systems
- High-level alarms
- Remote monitoring
- External pipework
- Pumps
- Access covers
- Additional inlets

Delta House, Merlin Way, North Weald, Epping, Essex, CM16 6HR
01992 523 523 | info@deltamembranes.com | www.deltamembranes.com

PRODUCT DATA SHEET

Delta Bespoke 800 Series – Dual V3 (800.1750)

Technical data

PUMP SPECIFICATIONS

Pump type	V3 Submersible Pump
Pump type	Vortex
Control	Automatic
Power supply	230 VAC
Rated current	1.9 A
Motor rating (P2)	180 W
Revs per min.	2800 rpm
Discharge size	1¼"
Free passage	10 mm
Max. vertical	6.8 m
Max. flow rate	2.9 l/s
Max liquid temp.	<40 °C
Cable length	10 m
Weight	5.2 kg

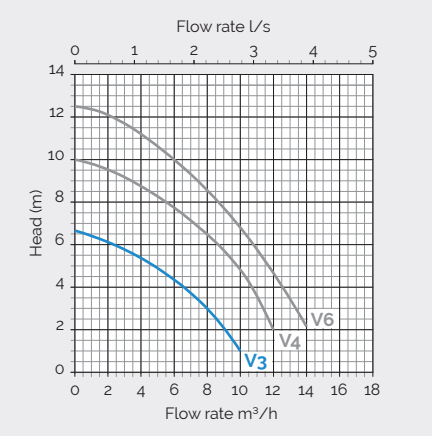

CHAMBER SPECIFICATIONS

Chamber	800.1750
Material	Tank-grade polyethylene
Dimensions	900 mmØ x 1750 mmH
Clear opening	600 mm x 450 mm
Inlet	110 mm
Internal pipework	1¼" PVC Class E
Discharge	2" PVC Class E
Cable duct	50 mm
Vent duct	110 mm

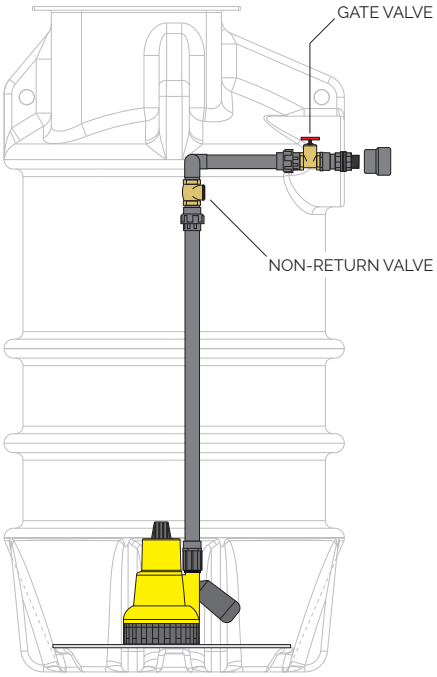

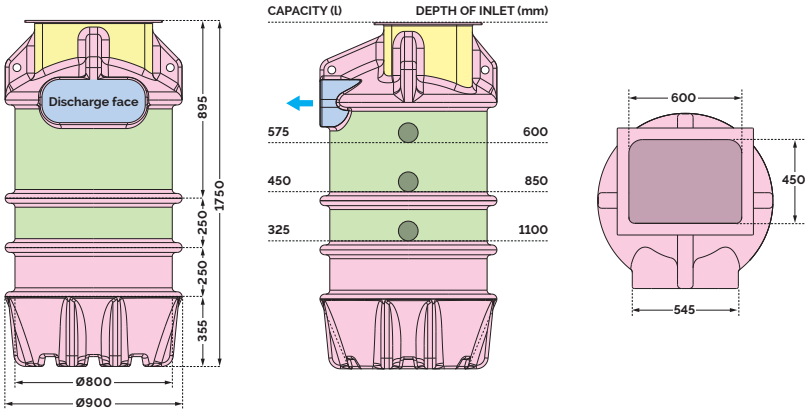

POSITIONING CONNECTIONS

Discharge only	Inlet location allowed	Cable ducts and vents only	No drilling allowed

Other information

All data and information contained in these Product/Technical Data Sheets is up-to-date and correct as at the date of issue. The information given is suggested as guidance and should only be used for evaluating your specific application. Delta Membrane Systems Limited cannot control or anticipate the conditions under which this product may be used, each user should review the information in specific context of the planned use. The information contained in these Product/Technical Data Sheets should not be considered a warranty, expressed, or implied, including but not limited to a warranty of merchantability or fitness for a particular purpose. In no event shall Delta Membrane Systems Limited be liable for any incidental or consequential damages resulting from the use, misuse, or inability to use the product. This exclusion applies regardless of whether such damages are sought based on breach of warranty, breach of contract, negligence, strict liability in tort, or any other legal theory. When in doubt, contact Delta's Technical Team on 01992 523 523.

NBS Source

PRODUCT DATA SHEET

Delta Bespoke 800 Series – Dual V3 (800.2000)

BASEMENT DRAINAGE & PROTECTION

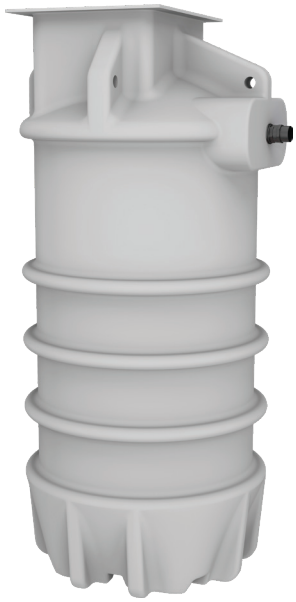

Description

The Delta Bespoke 800 Series of Package Pumping Station are available in depths from 1250mm to 2000mm.

The heavy-duty Delta Bespoke 800 Series – Dual V3 (800.2000) Packaged Pumping Station has been specifically designed to collect ground and surface water from basements, below ground structures.

Typical applications include Type C, Cavity Drained Waterproofing solutions and/or surface water from roofs, buried roofs, terraces and patios (subject to selection criteria).

Delta Bespoke 800 Series – Dual V3 (800.2000) system includes: a polyethylene chamber, 1¼" PVC internal pipework, two Delta V3 sump pumps, 110mm inlet, 50mm cable duct, 110mm vent and 2" discharge. This product is specifically designed for below ground applications where hydrostatic water pressure may be present.

We recommend surrounding the Delta Bespoke 800 Series – Dual V3 with concrete to prevent movement. An access cover is not supplied, as these are generally site specific and installed in the final finish. If required, the chamber will accept a standard 450mm x 600mm cover and frame. Inlets can easily be drilled and sealed on site, making this product straightforward to install.

The Delta Bespoke 800 Series – Dual V3 (800.2000) is not suitable for collecting foul water.

Features

- Suitable for ground, surface, storm, and grey water applications
- Large chamber, manufactured from superior polyethylene enabling the – Delta Dual V3 (800.1250) to withstand hydrostatic forces encountered in applications with high water tables
- Flow rate up to 2.9 l/s
- Quick and simple installation
- Supplied with two powerful Delta Dual V3 Pumps
- Suitable for residential, commercial and heritage projects

Product details

DMS V3.800.2000

Specification

- NBS Specification R18 (Clause 310) Pumping Stations and Pressure Pipelines
- BS 8102:2022 Type C Drained Protection

Associated products

- Battery backup systems
- High-level alarms
- Remote monitoring
- External pipework
- Pumps
- Access covers
- Additional inlets

NBS Source

Delta House, Merlin Way, North Weald, Epping, Essex, CM16 6HR
01992 523 523 | info@deltamembranes.com | www.deltamembranes.com

PRODUCT DATA SHEET

Delta Bespoke 800 Series – Dual V3 (800.2000)

Technical data

PUMP SPECIFICATIONS

Pump type	V3 Submersible Pump
Pump type	Vortex
Control	Automatic
Power supply	230 VAC
Rated current	1.9 A
Motor rating (P2)	180 W
Revs per min.	2800 rpm
Discharge size	1¼"
Free passage	10 mm
Max. vertical	6.8 m
Max. flow rate	2.9 l/s
Max liquid temp.	<40 °C
Cable length	10 m
Weight	5.2 kg

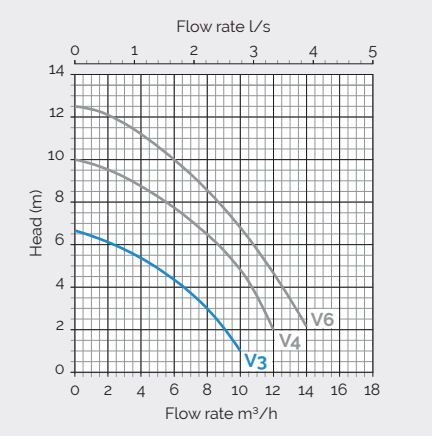

CHAMBER SPECIFICATIONS

Chamber	800.2000
Material	Tank-grade polyethylene
Dimensions	900 mmØ x 2000 mmH
Clear opening	600 mm x 450 mm
Inlet	110 mm
Internal pipework	1¼" PVC Class E
Discharge	2" PVC Class E
Cable duct	50 mm
Vent duct	110 mm

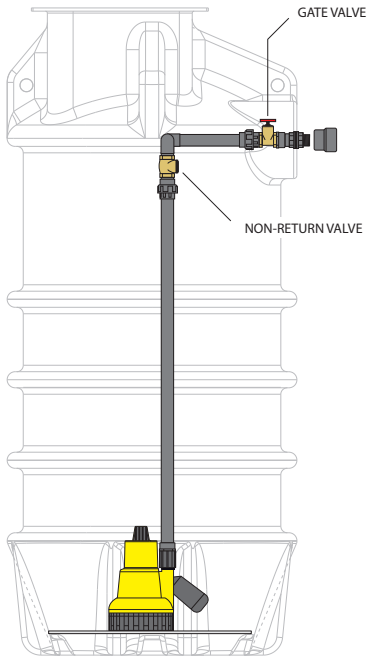

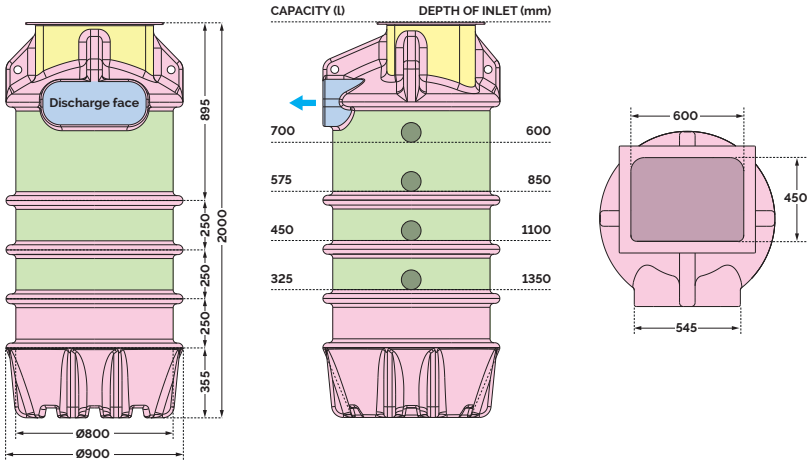

POSITIONING CONNECTIONS

Discharge only	Inlet location allowed	Cable ducts and vents only	No drilling allowed

Other information

All data and information contained in these Product/Technical Data Sheets is up-to-date and correct as at the date of issue. The information given is suggested as guidance and should only be used for evaluating your specific application. Delta Membrane Systems Limited cannot control or anticipate the conditions under which this product may be used, each user should review the information in specific context of the planned use. The information contained in these Product/Technical Data Sheets should not be considered a warranty, expressed, or implied, including but not limited to a warranty of merchantability or fitness for a particular purpose. In no event shall Delta Membrane Systems Limited be liable for any incidental or consequential damages resulting from the use, misuse, or inability to use the product. This exclusion applies regardless of whether such damages are sought based on breach of warranty, breach of contract, negligence, strict liability in tort, or any other legal theory. When in doubt, contact Delta's Technical Team on 01992 523 523.