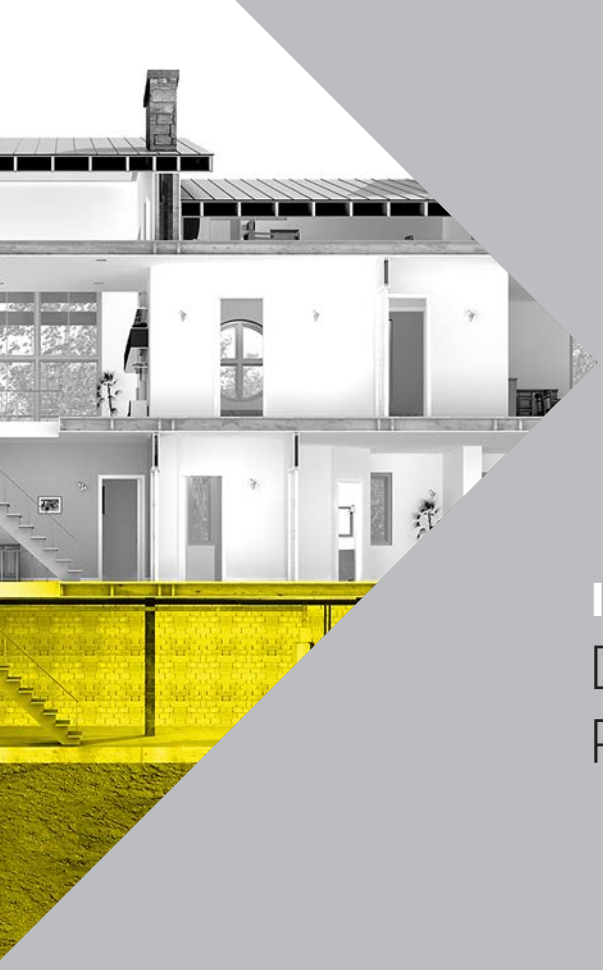

DELTA

INNOVATION | MANUFACTURER | DESIGN | SOLUTION

INSTALLATION GUIDE

Delta Dual V3
Packaged Pumping Station

www.deltamembranes.com

THIS MANUAL SHOULD BE KEPT WITH THE PUMP STATION OR THE HOMEOWNER

Contents

1. Delta Dual V3 overview 1
   1.1 Delta Dual V3 overview 1
   1.2 Example installation 1
   1.3 Parts included 1
   1.4 Optional extras 1
   1.5 Technical information 2
2. Discharge pipework and fittings 3
   2.1 Discharge pipework and fittings 3
   2.2 Spare parts 4
3. Pump chamber depth limits 5
4. Installation guidelines 6
   4.1 Installation guidelines 6
   4.2 Pump station location 6
   4.3 Installation within a reinforced concrete sump 6
   4.4 Cable duct guidance 7
      4.4.1 Constructing the cable duct 7
      4.4.2 Cable extensions 7
   4.5 Vent duct guidance 7
5. Installation of chamber 8
   5.1 Construction of a reinforced concrete box (recommended) 8
   5.2 Construction of a reinforced cage 10
   5.3 Connection of 110 mm inlet pipework 11
   5.4 Connecting perimeter channel to chamber 12
   5.5 Connection of discharge/cable duct and vent 13
   5.6 Backfill around chamber with concrete (RC box) 15
   5.7 Concrete backfill around chamber (with reinforced cage) 16
   5.8 Preparing chamber for submersible pump installation 17
   5.9 Installing pump in chamber with high-water level alarm (Delta HLA) 18
6. Wiring diagrams 21
   6.1 Wiring diagram with Delta HLA 21
   6.2 Wiring diagram with Delta UPS V3 22
   6.3 Wiring diagram with Delta UPS V4/6 23
   6.4 Wiring diagram with Delta Battery Backup 24
7. Maintenance 25
8. Health and safety 25
9. Warranty 26
10. Troubleshooting 27
11. Ancillaries 28
12. Drainage channel components 30
13. Perimeter channel inlet template 31
14. Commissioning details 32

1. Delta Dual V3 overview

1.1 Delta Dual V3 overview

The Delta Dual V3 is a packaged pump station designed to collect groundwater via perimeter channel or modular drainage and/or clear opening to the top of the chamber – please visit our website for water collection details. Typically, the Dual V3 would be used to collect groundwater from a basement up to 150m² and/or surface water from a light well up to 12m² to a maximum head of 3.5m.

The pump station has been specifically designed for below ground applications. The chamber is manufactured from tank-grade polyethylene and as such is extremely robust.

The pump station is delivered as a complete package including, the chamber, internal pipework and two powerful V3 pumps. It is designed to be installed by contractors with competent building, plumbing and electrical skills. The pumps operate by fixed arm floats, the duty pump is set at a standard height (210mm to base of float) and the backup pump is set at a high level (380mm to base of float). The high level alarm (where fitted) will operate if the duty pump fails leaving the backup pump to discharge water.

A Delta HLA high level alarm (DMS 190) is offered as a recommended extra to alert the property occupant when the water level in the chamber becomes too high.

A Delta UPS V3 (DMS E021) is recommended to power the pumps during power outage. Please see Section 1.4 for more details about optional extras designed for the Delta Dual V3 packaged pumping station.

1.2 Example installation

A Inlet pipe
B Screed
C Insulation
D Concrete base
E MS20 Membrane
F Pump chamber
G Inspection cover
H Cable duct
I Discharge pipe
J Basement slab
K Distribution board
L Non-switched fused spur
M Delta HLA
N Volt-free contact (optional)

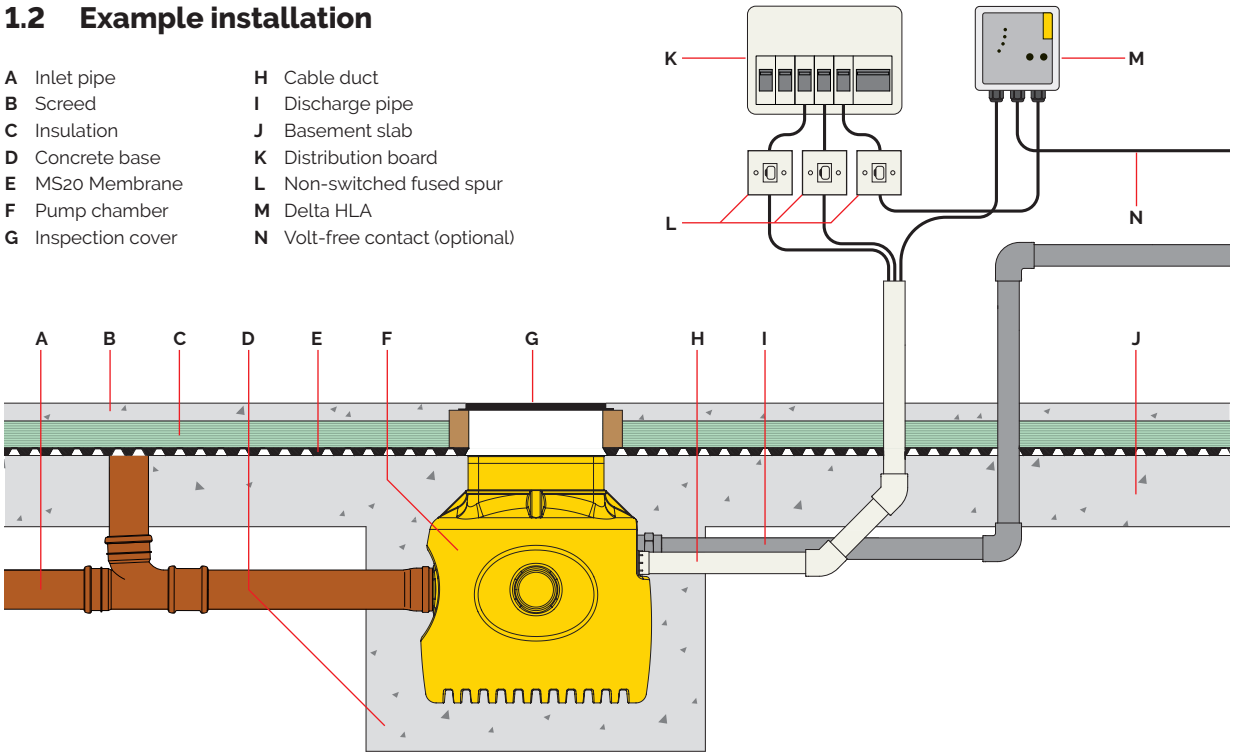

1.3 Parts included

- Chamber - 902 x 655mm deep
- 1.25" internal pipework
- 2 x Delta V3 submersible pumps
- 1.25" discharge socket (plain/threaded).
  2" cable duct male iron. 2" vent duct male iron.

1.4 Optional extras

- Delta HLA – high level alarm (DMS 190)
- Delta UPS V4/6 (DMS E022)
- 1.25" discharge pipework and various fittings
- 1.25" to 2" reducer kit
- 2" discharge pipework and various fittings

1.5 Technical information

Pump specification		
Pump type		V3
Power	P_1 (kW)	0.43
	P_2 (kW)	0.18
Rated current (A)		1.90
Power phase		Single
Non-switched fused spur rating (A)		13
RCBO rating (A)		6 (Type C)
Cable length (m)		10
Max. temperature (°C)		50
Weight (kg)		5.64

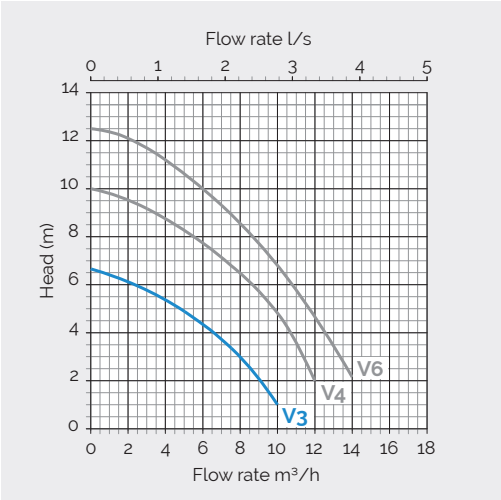

Chamber specification		
Chamber material		HDPE (ICO1314 grade)
Size (mm)	Chamber diameter	660
	Overall diameter	750 (across spigots)
	Depth	710
Volume (l)	Below inlet	90
	Total	220
Inspection cover		Not supplied
Clear opening to chamber (mm)		315 x 315
Fixed inlets (mm)		3 x 110
Cable duct (mm)		50
Vent (mm)		N/A
External discharge connection		1.25" BSP female
Internal pipework manifold		1.25" BSP, PVC Class E

All dimensions are in millimetres (mm) and are to the invert level (bottom of pipe). All capacities are in litres (l).

INVERT LEVEL

Positioning connections

Discharge only
Inlet location allowed
Inlet, cable ducts or vent allowed
Cable ducts and vents only
No drilling allowed

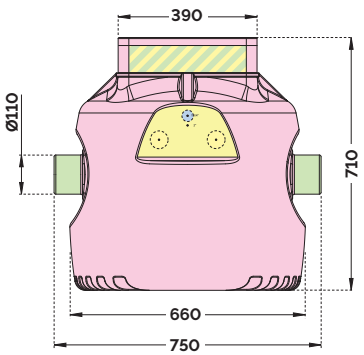

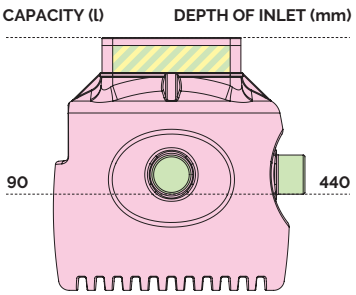

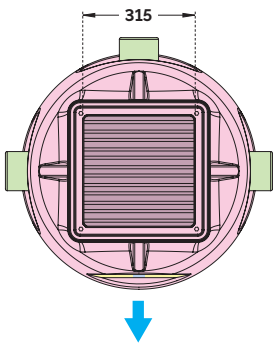

2. Discharge pipework and fittings

2.1 Discharge pipework and fittings

A selection of discharge pipework and fittings are available for the Delta Dual V3 packaged pumping station.

Should you require to place an order for any of these items, please complete the form below, scan and email to pumps@deltamembranes.com to allow us to process your order.

1¼" PIPEWORK AND FITTINGS

Product	Code	Qty
1¼" pressure pipe, PVC Class E (2 m)	DMS E100	
90 degree elbow PL/PL, 1¼"	DMS E101	
45 degree elbow PL/PL, 1¼"	DMS E102	
Coupling (socket) PL/PL, 1¼"	DMS E103	
Coupling (socket) PL/TH, 1¼"	DMS E107	
Coupling (socket) TH/TH, 1¼"	DMS E111	
Male threaded adaptor (male iron), 1¼"	DMS E104	
32 mm male iron, low pressure	DMS E112	
Saddle clamp, 110 mm x 1¼" BSP	DMS E113	

1¼" TO 2" REDUCER KIT

Product	Code	Qty
1¼" to 2" Reducer Kit	DMS E219	

The Delta Dual V3 packaged pumping station comes with a 1¼" discharge. Purchase a 1¼" to 2" Reducer Kit (DMS E219) to connect to 2" discharge pipework and fittings.

2" PIPEWORK AND FITTINGS

Product	Code	Qty
2" pressure pipe PVC Class E (2 m)	DMS E120	
90 degree elbow PL/PL, 2"	DMS E121	
45 degree elbow PL/PL, 2"	DMS E122	
Coupling (socket) PL/PL, 2"	DMS E123	
Coupling (socket) PL/TH, 2"	DMS E127	
Coupling (socket) TH/TH, 2"	DMS E131	
Male threaded adaptor (male iron), 2"	DMS E124	
50 mm male iron, low pressure	DMS E132	
Saddle clamp, 110 mm x 2" BSP	DMS E133	

MISCELLANEOUS

Product	Code	Qty
Solvent cement, WDF-05, 250 ml	DMS E175	
PVC cleaning fluid, 500 ml, tin	DMS E176	
PTFE tape, roll	DMS E177	

Name:	
Company name:	
Delivery/site address:	
Email:	
Telephone number:	Mobile Number:

Signature:	Date:

Please scan this order form and email to pumps@deltamembranes.com

2.2 Spare parts

Part	Description	DMS Code
A	Coupling PL/TH, 1.25"	DMS E107
B	Tank connector, 1.25"	DMS E110
C	Socket union, 1.25"	DMS E106
D	'O' ring for 1.25" socket union	DMS E114
E	Link piece, 1.25"	DMS E115
F	Tee-piece, 1.25"	DMS E105

Part	Description	DMS Code
G	90° elbow, 1.25"	DMS E101
H	High pressure PVC pipe (Class E), 1.25"	DMS E100
I	Male threaded adaptor, 1.25"	DMS E104
J	Delta V3 Submersible Pump, including: – float switch assembly (DMS 192) – non-return valve (DMS E195)	DMS 116

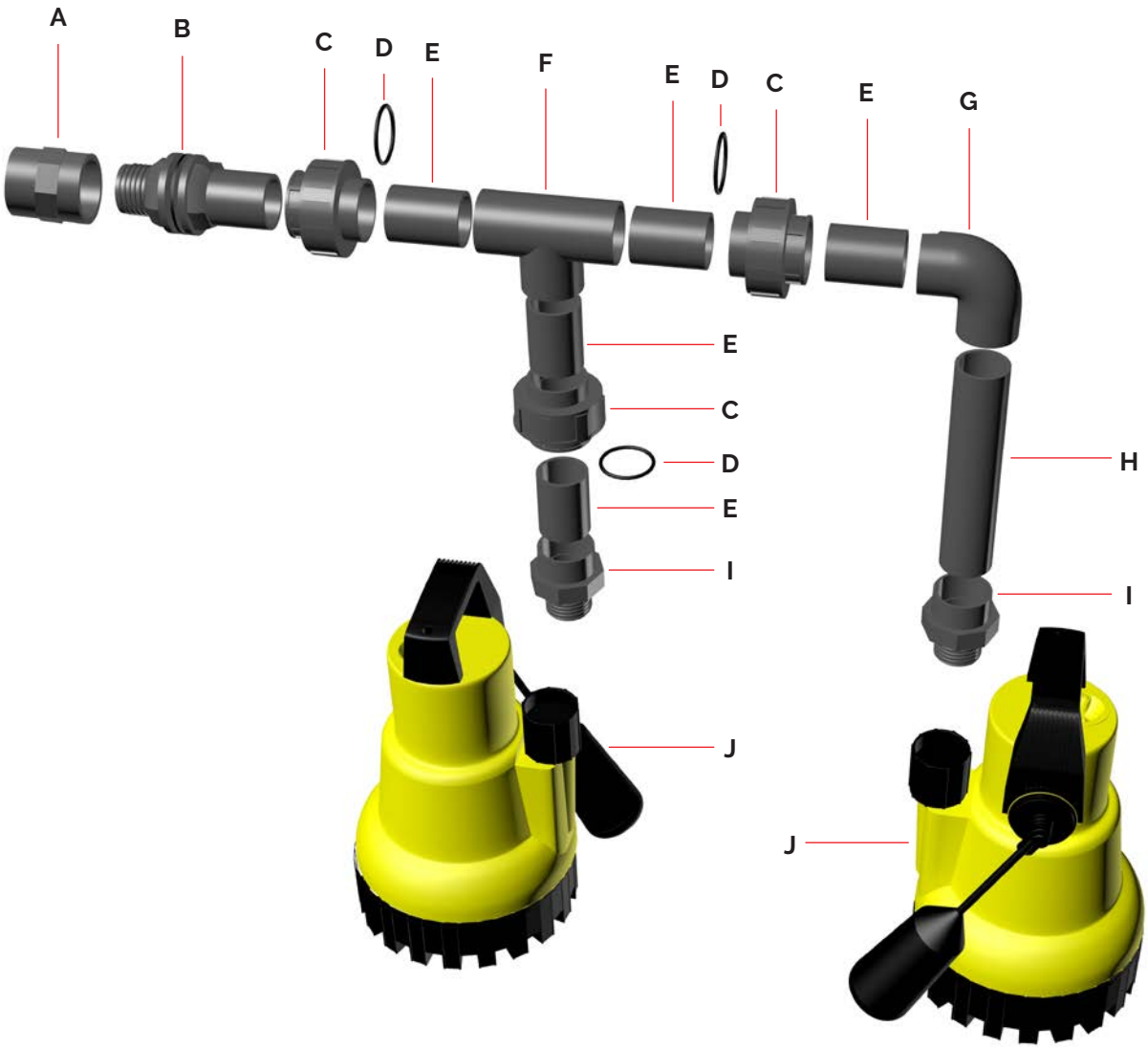

3. Pump chamber depth limits

If the inlet does not allow the pump chamber to be within depth limits, please contact Delta Membranes on 01992 523 523 between 8am and 5pm, Monday to Friday or by email at info@deltamembranes.com for more information.

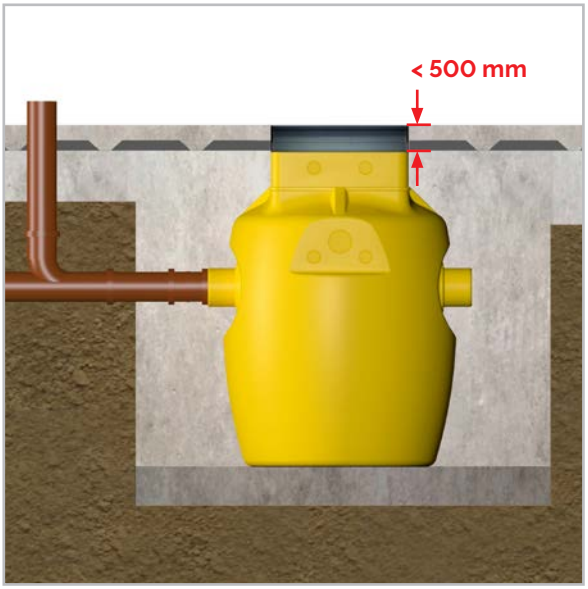

Less than 500 mm

The pump chamber must be installed no greater than 500 mm below floor finishes.

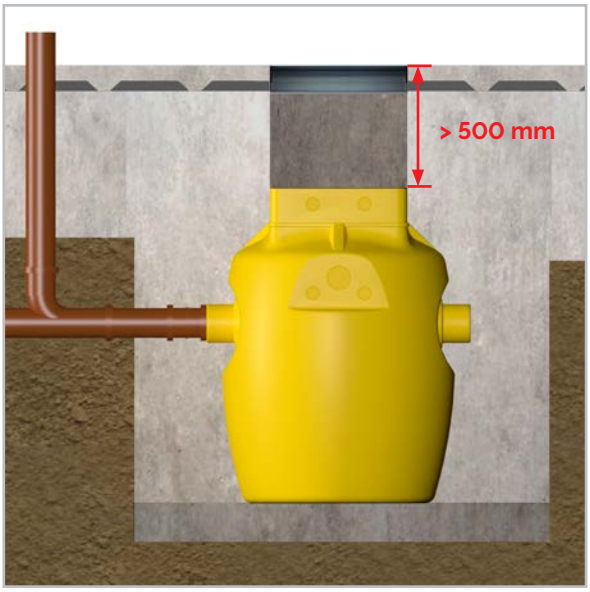

More than 500 mm

A pump chamber installed at a greater below floor finish of 500 mm cannot be serviced safely in accordance with The Construction (Design and Management) Regulations 2015.

4. Installation guidelines

4.1 Installation guidelines

This guide is an illustration of installation guidelines which should be followed for proper installation of the Delta Dual V3 Packaged Pump Station, including housing. It is important to note these instructions are for guidance only and it is the installer's responsibility to satisfy themselves that the installation procedure is in accordance with the prevailing ground conditions and good build practice, to eliminate any potential damage to the pump station chamber either during or after installation. The installer should also satisfy themselves that the system can be installed in conjunction with these guidelines, prior to work commencing.

Please read these instructions in full, prior to the commencement of installation. If you are unsure on any aspect, the ask for advice before proceeding by contacting Delta Membranes on 01992 523 523 between 8am and 5pm, Monday to Friday or by email at info@deltamembranes.com.

4.2 Pump station location

The Delta Dual V3 Packaged Pump Station requires routine maintenance, it is important that careful consideration is taken to position the chamber in a location which will allow for permanent access.

4.3 Installation within a reinforced concrete sump

A structural and waterproofing engineer must be consulted when designing the waterproof reinforced concrete sump and backfill to ensure that it can withstand the anticipated pressures, and that they are not transferred onto the chamber.

The chamber is manufactured from tank-grade polyethylene and is extremely robust. However, as with all pre-formed chamber they are susceptible to floatation and hydrostatic pressures exerted in high water table conditions.

To ensure these forces are not transferred onto the chamber, we strongly recommend the chamber is installed within a waterproof reinforced concrete (RC) sump.

Furthermore, when constructing the waterproof reinforced concrete sump, adequate space must be made for connections to the chamber e.g. inlets, discharge, cable and vent ducts. Consideration must also be made to the depth and orientation of all connections to ensure that they line up with the chamber.

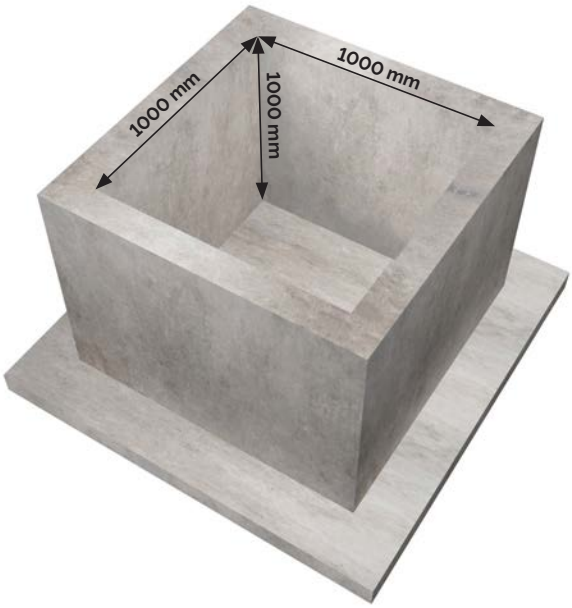

4.4 Cable duct guidance

It is vital to pull a draw cord through the cable duct as it is being constructed so that pump and float cables can be pulled through during installation. Ensure the cord's loose end cannot slip back into the duct.

The cable duct for the Delta Dual V3 packaged pumping station should be 50 mm diameter. This can be low pressure ABS waste pipe or high pressure PVC. The cable duct can be positioned on any flat face of the chamber neck below the scribe line, or on the discharge face (please refer to Sections 1.5 & 5.4).

4.4.1 CONSTRUCTING THE CABLE DUCT

To allow cables to be easily pulled through the cable duct use sweeping corners instead of tight 90 degree elbows. These can be created by using two 45 degree elbows.

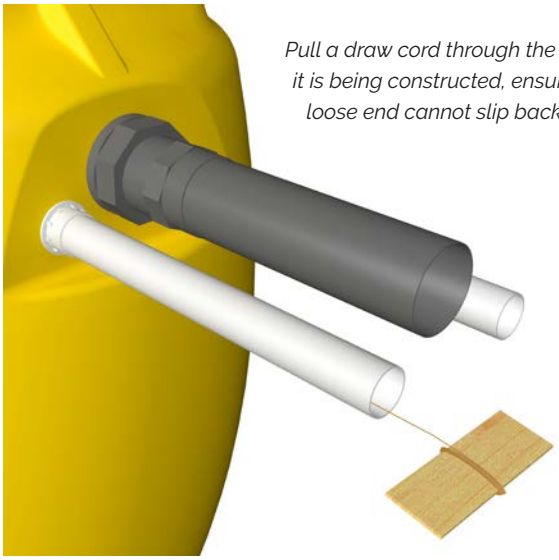

Pull a draw cord through the cable duct as it is being constructed, ensuring the cord's loose end cannot slip back into the duct.

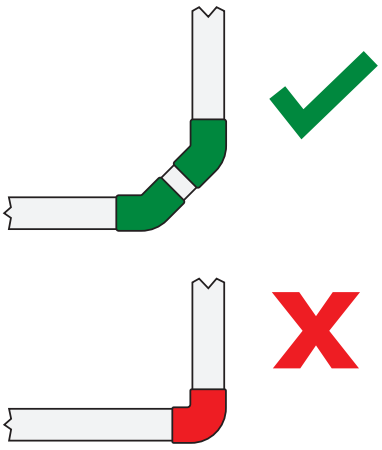

Swept bends allow the cables to be pulled through the cable duct.

4.4.2 CABLE EXTENSIONS

If cable extensions are required for the pump power cable or the float cable, a qualified electrical contractor must make all electrical connections. Suitable cable extension kits are available to order. Please contact Delta Membranes on 01992 523 523 between 8am and 5pm, Monday to Friday or by email at info@deltamembranes.com for more information.

4.5 Vent duct guidance

If the pumping station receives surface water, for example from a lightwell, a vent duct must be installed. This duct must be vented to atmosphere. An air-admittance (Durgo) valve must not be installed. The vent duct's primary purpose is to equalise pressure within the chamber. It will also mitigate any odours from stagnant surface water in the base of the chamber.

A vent duct is not required if the chamber only accepts groundwater from a cavity membrane system.

5. Installation of chamber

5.1 Construction of a reinforced concrete box (recommended)

We strongly recommend the chamber is installed within a reinforced concrete box.

Excavate hole for chamber. Refer to section 4.3 for RC box internal dimensions.

Install re-bar as per structural engineer's details.

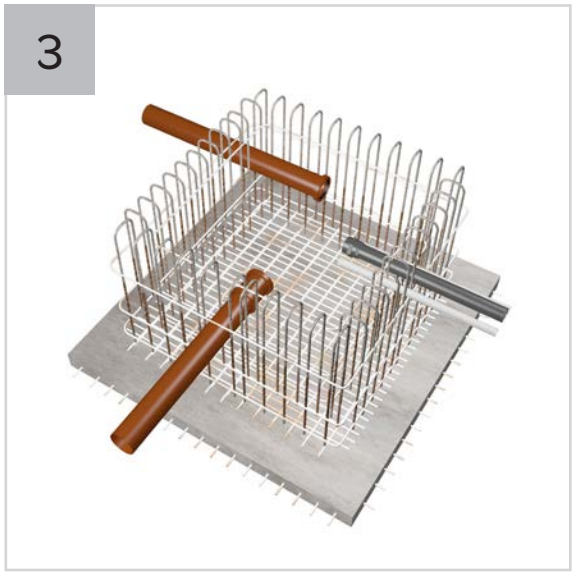

Lay inlet and discharge pipework. Allow pipework to protrude into RC box by a minimum of 100 mm.

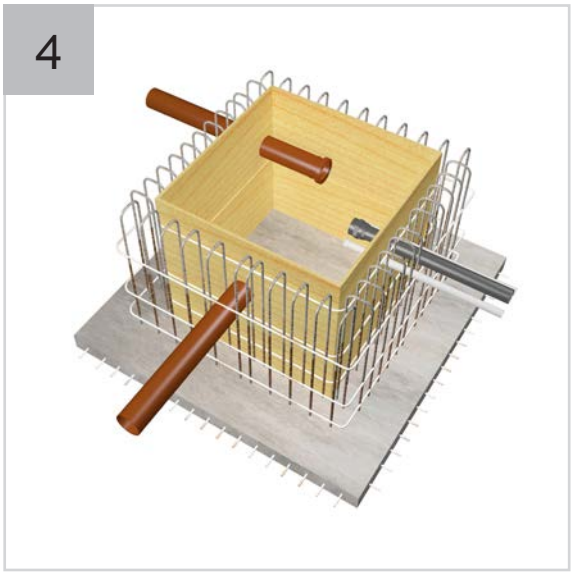

Create shuttering.

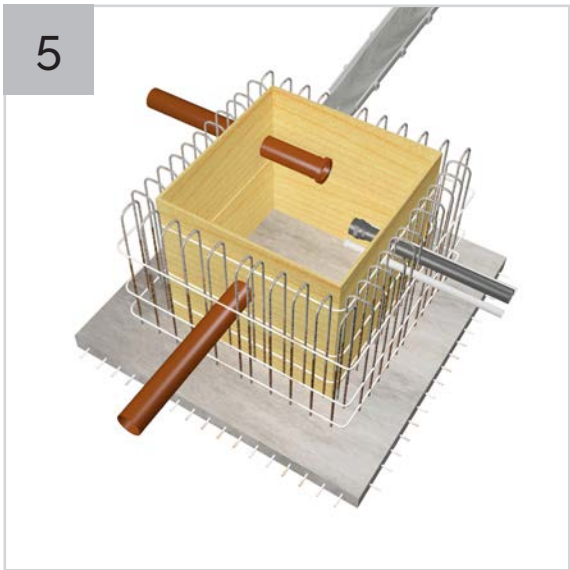

Pour concrete to form the reinforced concrete box as per structural engineer's details.

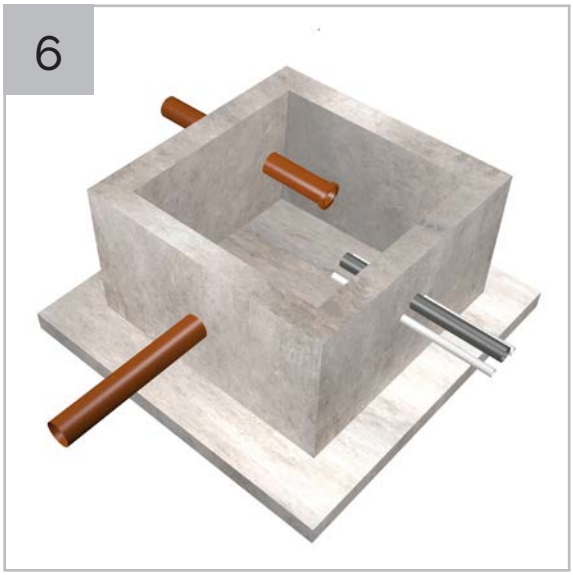

Allow the concrete to cure and then remove the shuttering.

Go to Section 5.3 »

5.2 Construction of a reinforced cage

We strongly recommend the chamber is installed within a reinforced concrete box (Section 5.1). For installation in a reinforced cage only, follow steps below instead.

1

Excavate hole for chamber. Refer to section 4.3 for RC box internal dimensions.

2

Install re-bar as per structural engineer's details.

3

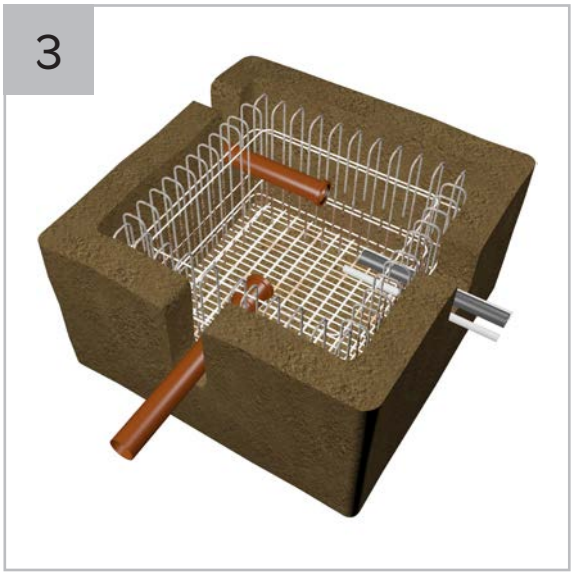

Lay inlet and discharge pipework. Allow pipework to protrude into cage by a minimum of 100 mm.

Go to Section 5.3 »

5.3 Connection of 110 mm inlet pipework

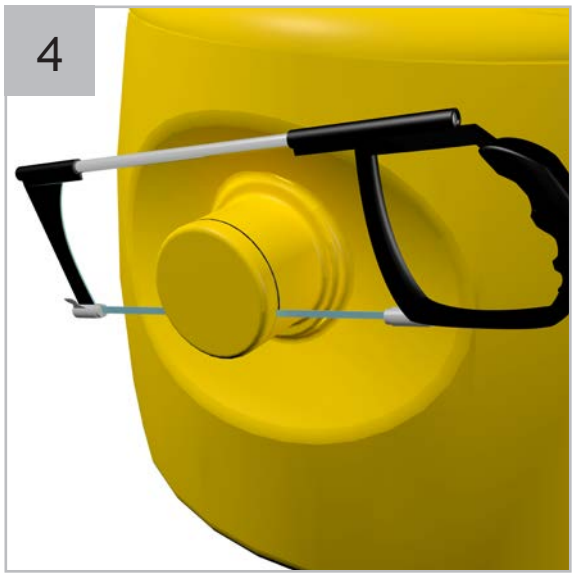

Saw off socket ends, where inlet pipes are to be connected.

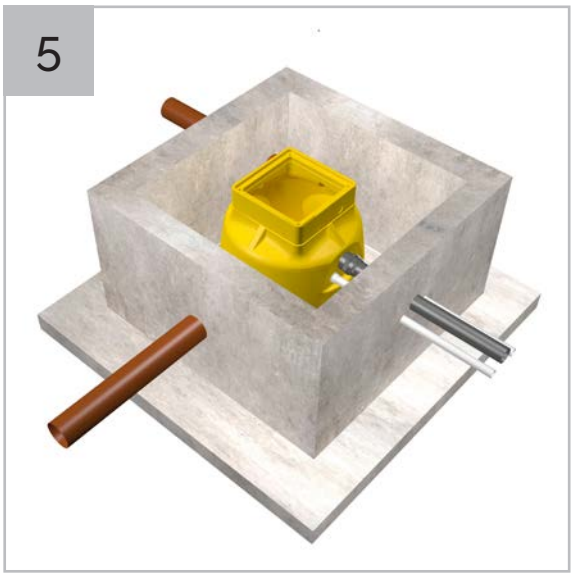

Position chamber in RC box.

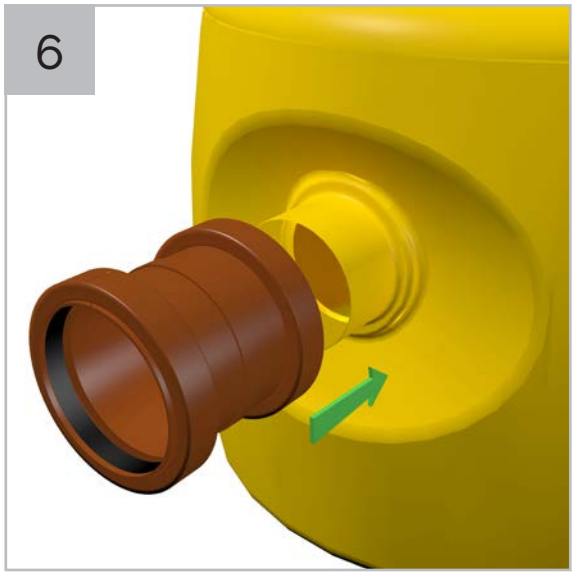

Fit push fit coupler.

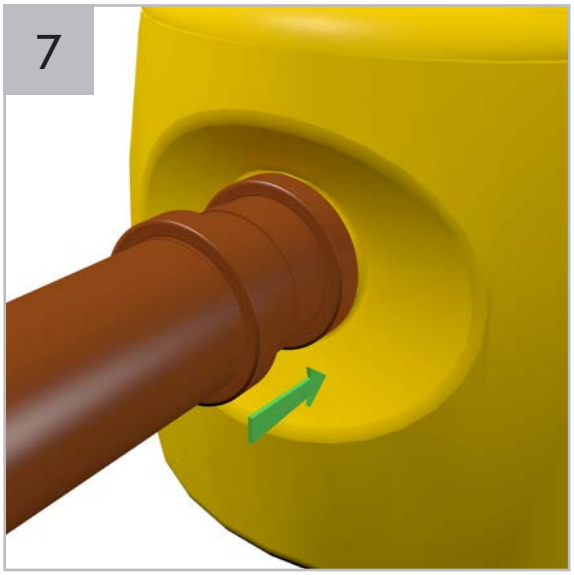

Connect inlet pipework to the chamber spigot.

Go to Section 5.4 »

5.4 Connecting perimeter channel to chamber

Delta chambers can accomodate direct connections of perimeter channels into the neck. These can be positioned on any flat face between the scribe line (25 mm from the top of the chamber) and the external lip locator. Do not cut or drill the chamber above the scribe line.

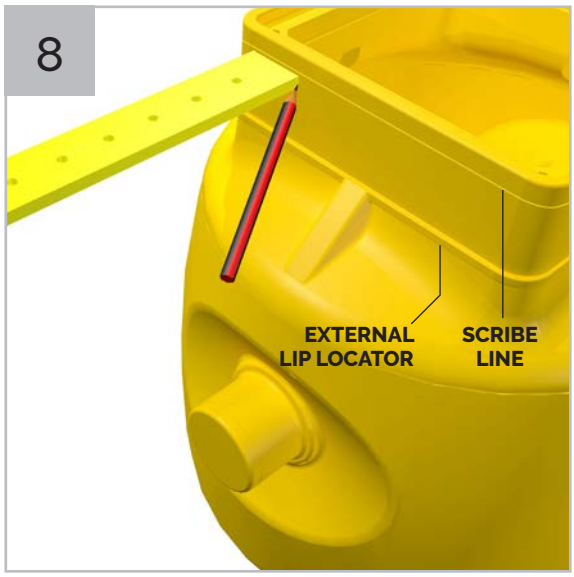

Position the inlet between the scribe line and the external lip locator. Trace around a piece of Delta channel as a guide, or use template provided in section 13 and in pipework kit supplied.

Drill holes in the inside area of your guide.

Carefully cut around the guide using a jigsaw.

Insert Delta perimeter drainage channel into chamber, allowing 33 mm inside overhang of channel inside the chamber.

Go to Section 5.5 »

5.5 Connection of discharge/cable duct and vent

Cable ducts and vents can be positioned to suit site requirements, either on the chamber neck or on the the discharge face. Please refer to the diagram on page 2 for more details. If drilling into the neck, do not cut the chamber above the scribe line. Guide holes are provided on the discharge face for easy positioning.

Use a 60 mm hole saw and arbor (DMS E218). For illustration we are using the lower cable duct/vent pipe position on the discharge face.

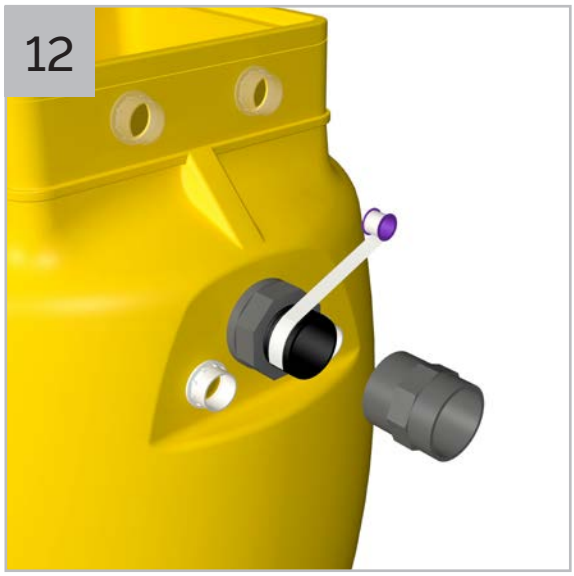

Wrap the thread on the tank connector's male thread with PTFE tape.

Securely fasten the plain/threaded socket onto the thread of the tank connector.

Apply Delta Solvent Cement around the first 20 mm of the external face of the discharge and cable duct pipe and internal side of their respective fittings.

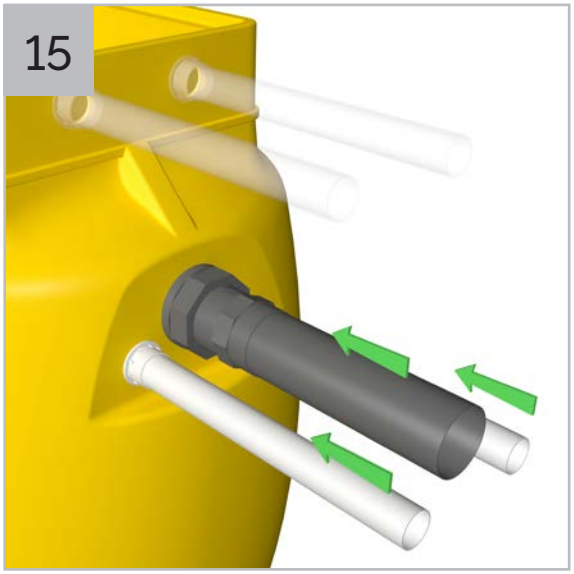

Push discharge and cable duct pipe into their respective fittings, twisting the pipe as it is pushed in to remove any trapped air.

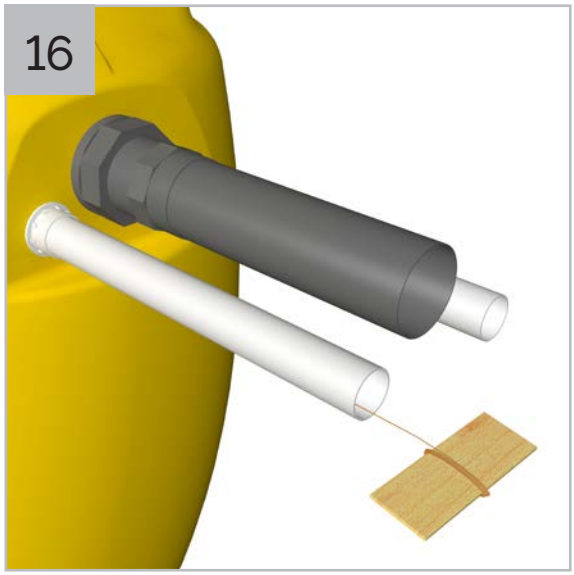

Ensure a draw cord is pulled through the cable duct as the cable duct is built.

If you are installing the chamber in a reinforced concrete box, go to Section 5.6 »

If you are installing the chamber in a reinforced cage, go to Section 5.7 »

5.6 Backfill around chamber with concrete (RC box)

To be followed when installing chamber in a reinforced concrete (RC) box.

Check all pipes are connected to the chamber correctly.

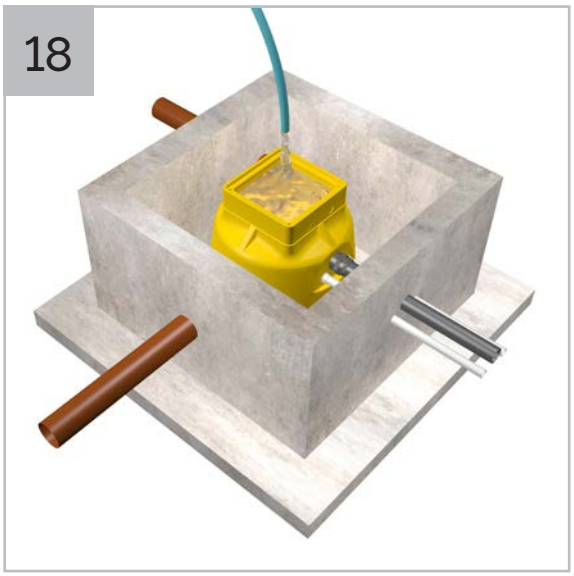

Completely fill chamber with water.

Once chamber has been filled with water, apply Delta AKTI-VO 201 (swellable mastic) to the entire external lip locator of chamber.

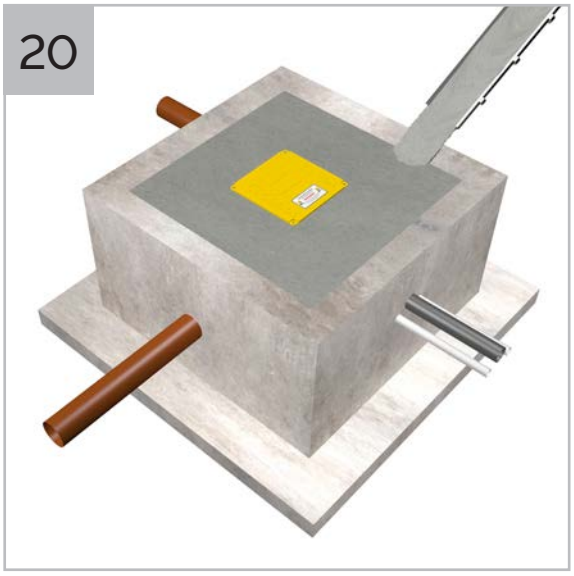

Fill void between RC box and chamber with concrete (we recommend use of C35 grade/PAV2 as a minimum) or as per the structural engineer's details.

Go to Section 5.8 »

5.7 Concrete backfill around chamber (with reinforced cage)

To be followed when installing chamber in the ground with a reinforced cage.

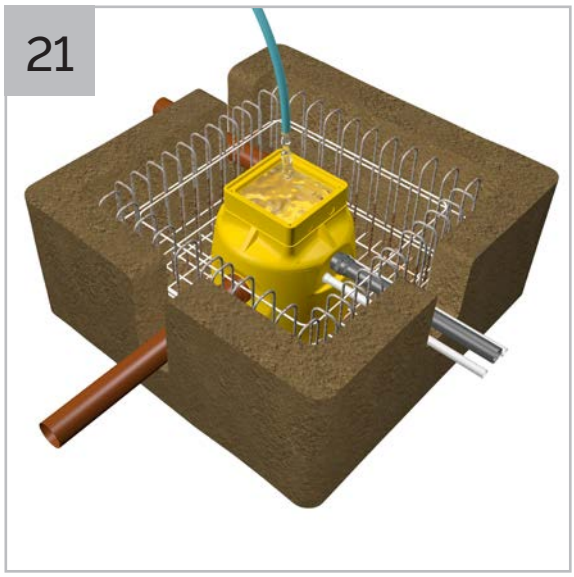

Completely fill chamber with water.

Once chamber has been filled with water, apply Delta AKTI-VO 201 (swellable mastic) to the entire external lip locator of Chamber.

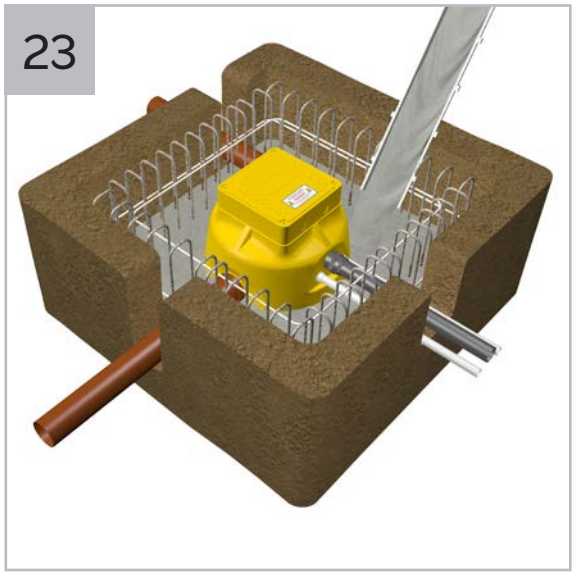

Fill void between soil and chamber with concrete (we recommend use of C35 grade/PAV2 as a minimum) or as per the structural engineer's details.

Allow concrete to cure.

Go to Section 5.8 »

5.8 Preparing chamber for submersible pump installation

25

Once successfully installed all chambers should be emptied. Use of temporary site pump(s) are suitable for this exercise. Care should be taken in ensuring water is being discharged somewhere suitable.

26

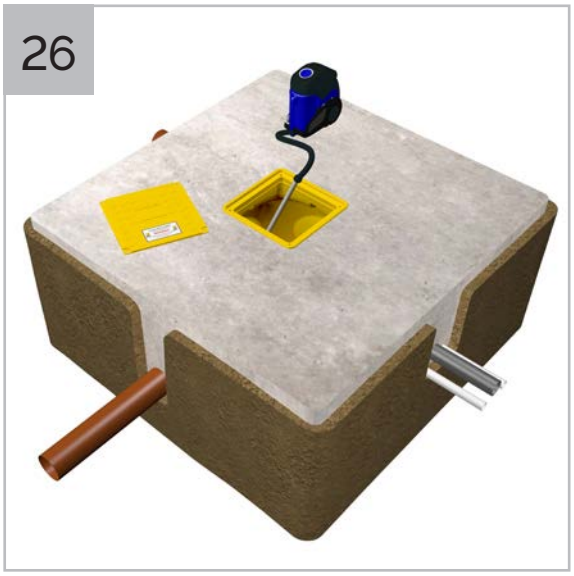

Manually remove any debris from chamber and residual water using a wet vacuum.

Go to Section 5.9 »

5.9 Installing pump in chamber with high-water level alarm (Delta HLA)

27

Wrap PTFE tape around thread located on male irons at the bottom of the discharge arms and securely fasten the discharge arms on to pumps.

28

Fill chamber half full with water.

29

Lower the pumps in to chamber. Ensure 'O' rings are correctly seated in unions and securely fasten the discharge arms into place. The duty pump (low float arm setting) should be closest to the discharge. The backup pump (high float arm setting) should be at the rear so that its float arm cannot be obstructed by the float cable.

30

When installing a Delta HLA high level alarm, please refer to the Delta HLA installation instructions.

31

Pull pump and high level alarm cables through cable duct.

32

Isolate main supply and connect each pump to a separate non-switched fused spur. When installing a Delta HLA, follow the wiring diagram in Section 6.

33

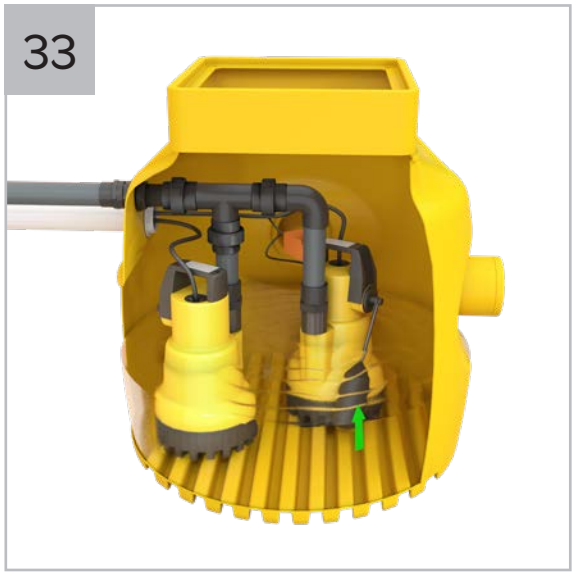

Ensure finger float is correctly installed vertically in shroud and not caught on float arm. Turn mains supply on and lift each pump float arm to test water is discharging correctly.

34

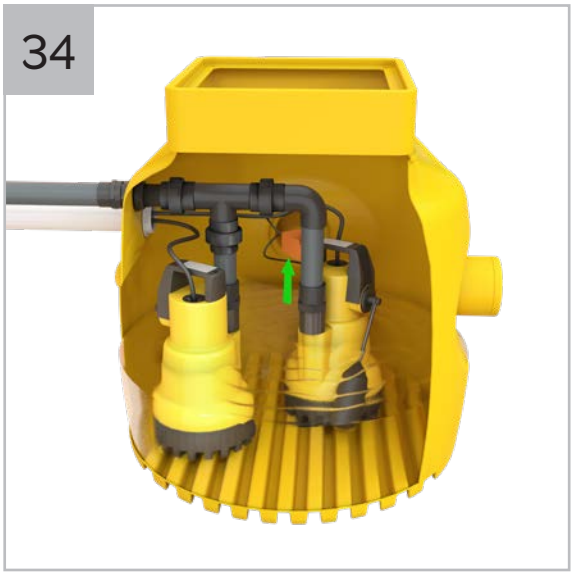

To test float switch, refer to the Delta HLA installation instructions.

Re-fit temporary site cover to protect the pump station.

6. Wiring diagrams

6.1 Wiring diagram with Delta HLA

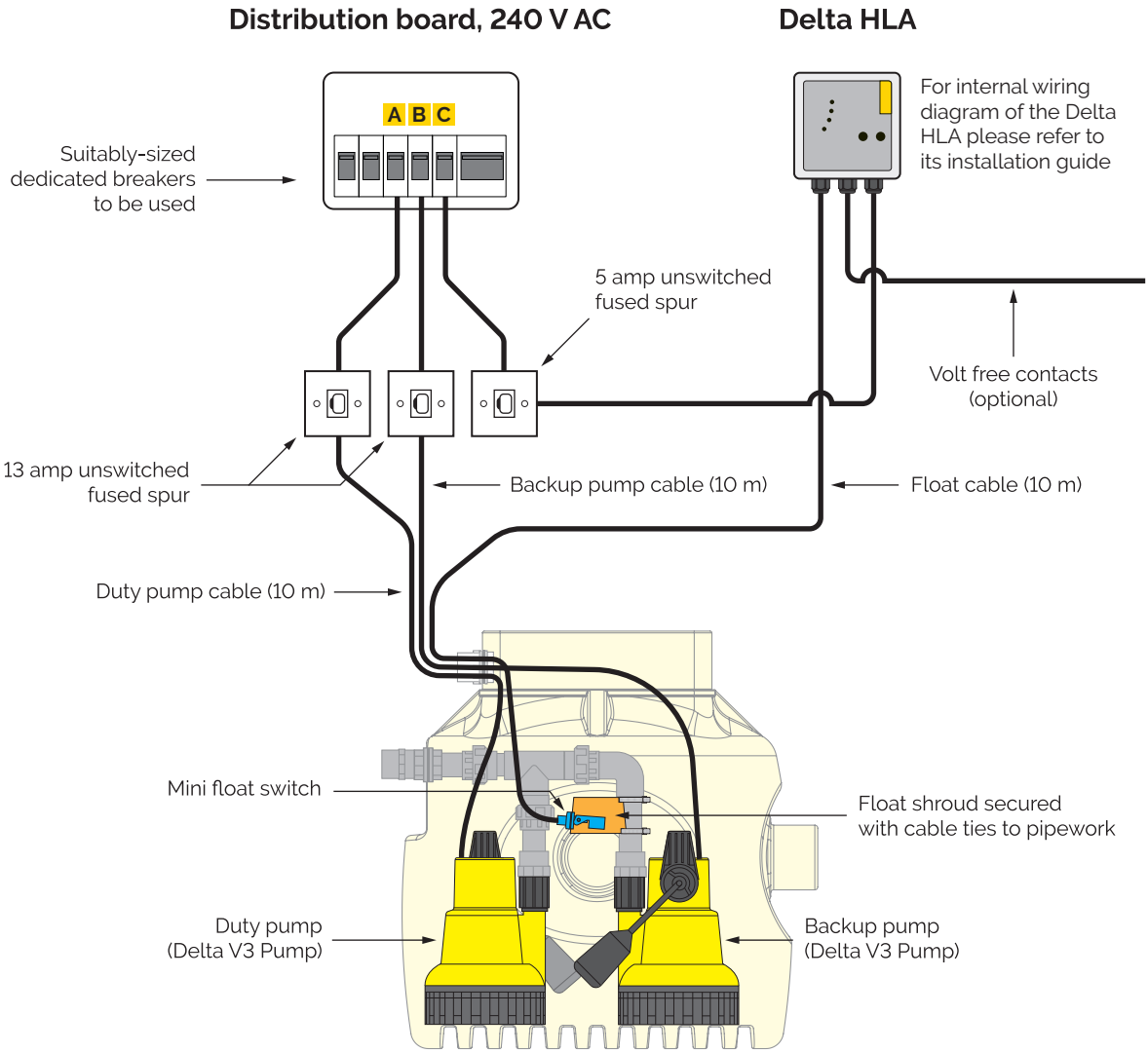

BREAKER SPECIFICATION

	Description	Device type	Rating
A	Delta V3 Pump	RCBO, Type C	6 A
B	Delta V3 Pump	RCBO, Type C	6 A
C	Delta HLA	MCB	6 A

6.2 Wiring diagram with Delta UPS V3

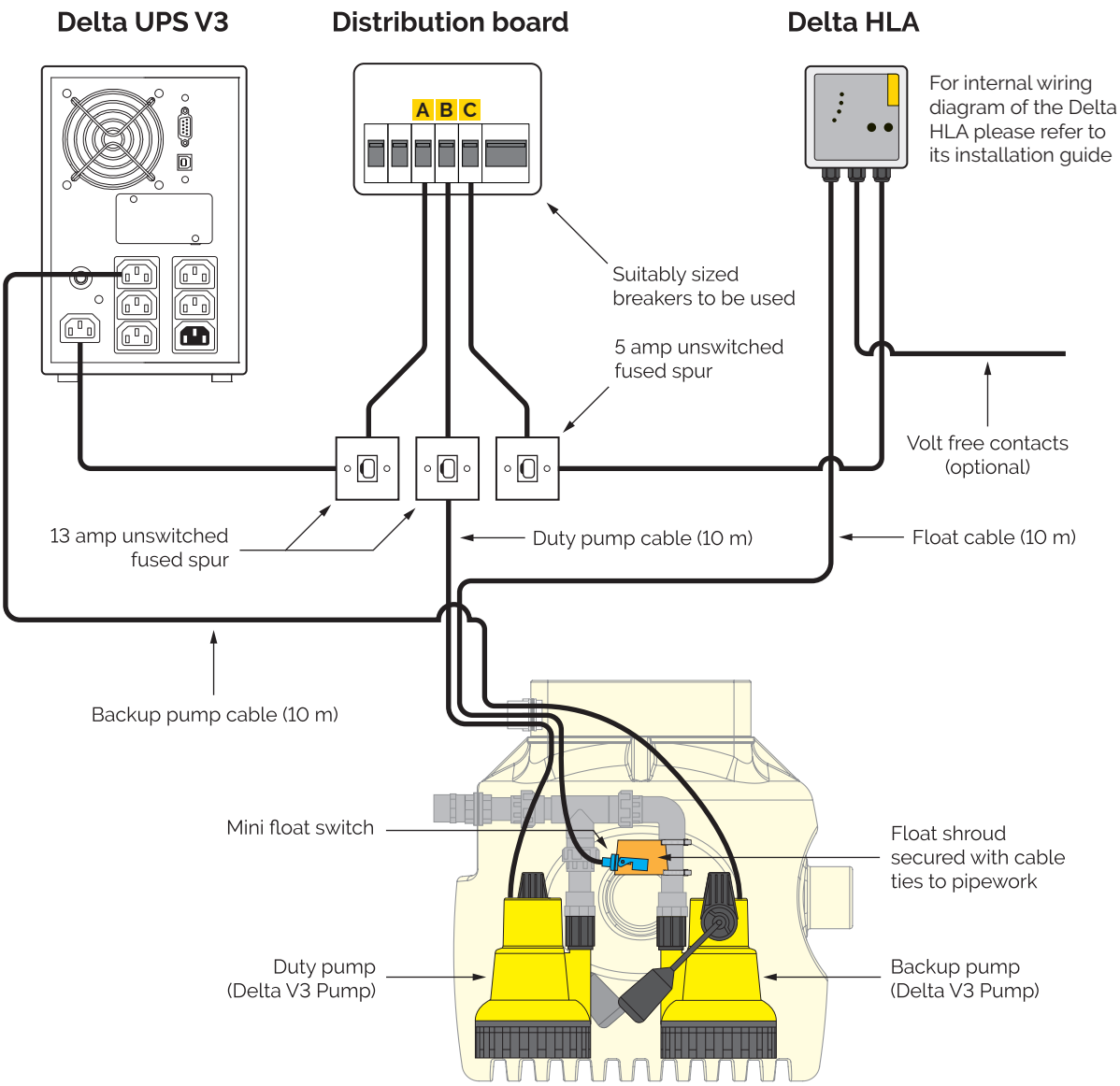

BREAKER SPECIFICATION

	Description	Device type	Rating
A	Delta UPS V3	RCBO, Type C	6 A
B	Delta V3 Pump	RCBO, Type C	6 A
C	Delta HLA	MCB	6 A

6.3 Wiring diagram with Delta UPS V4/6

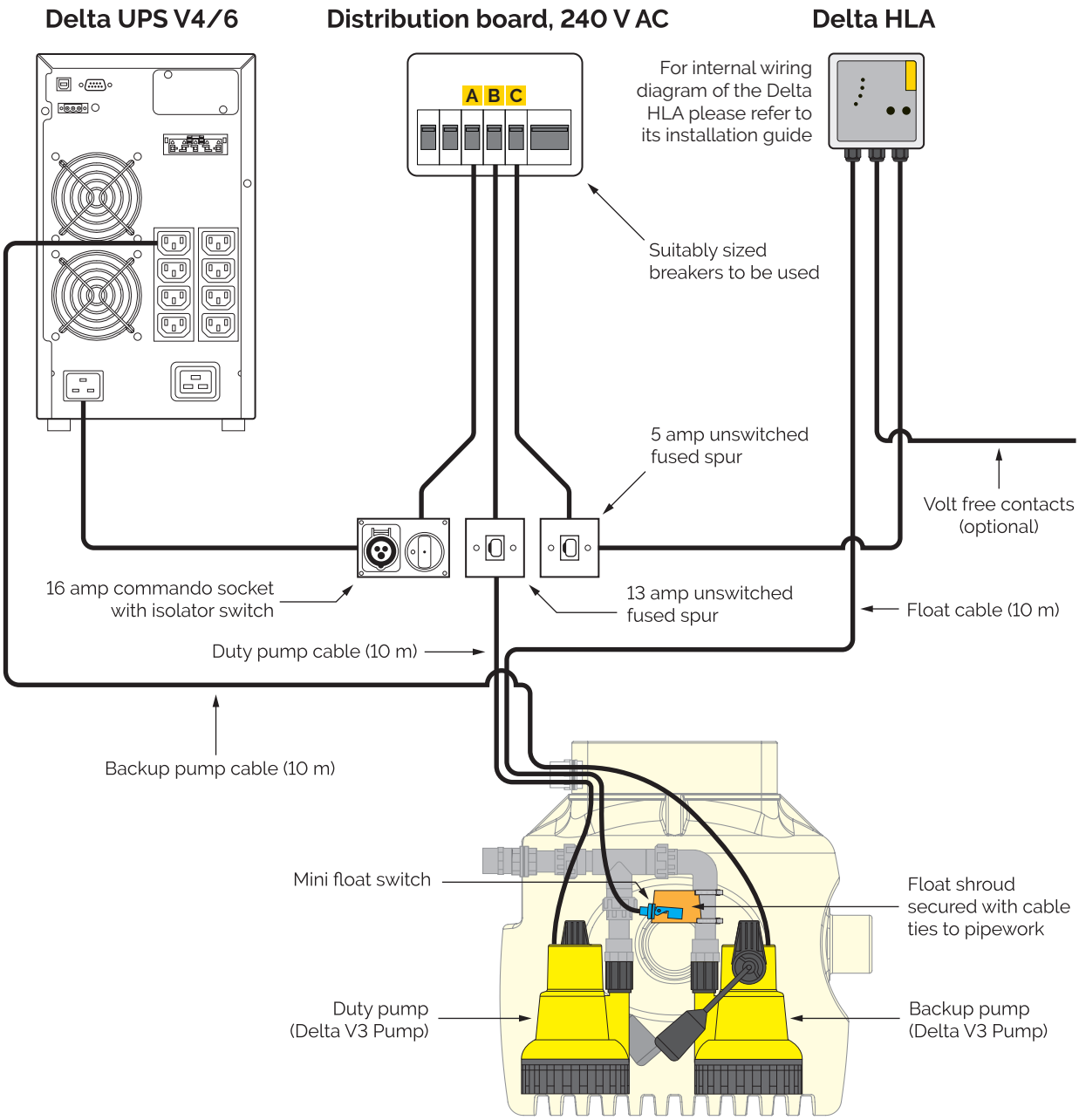

BREAKER SPECIFICATION

	Description	Device type	Rating
A	Delta UPS V4/6	RCBO, Type C	20 A
B	Delta V3 Pump	RCBO, Type C	6 A
C	Delta HLA	MCB	6 A

6.4 Wiring diagram with Delta Battery Backup

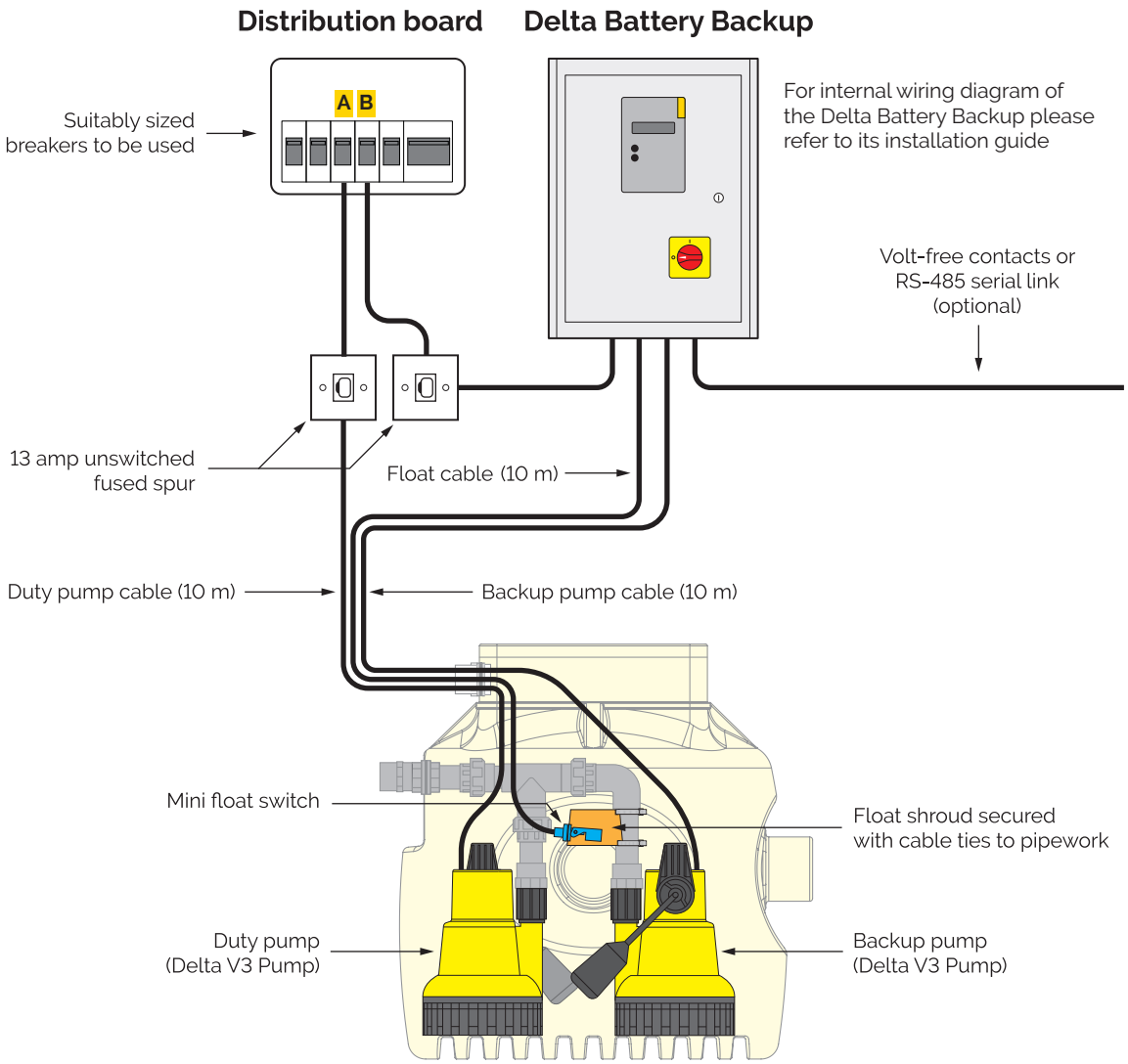

BREAKER SPECIFICATION

	Description	Device type	Rating
A	Delta V3 Pump	RCBO, Type C	6 A
B	Delta Battery Backup V3	RCBO, Type C	10 A

7. Maintenance

Sump pumps must be maintained. We recommend a qualified engineer examines and services equipment every year. Pumps running frequently due to higher water table, water drainage, or weather conditions should be examined more frequently, we recommend every 6 months. Sump pumps, being mechanical devices, may fail if not maintained which could lead to a flooded basement and costly repairs.

Regular servicing of sump pumps will increase efficiency and extend the life of the pump. All Delta pump systems should be maintained by one of our Delta Registered Pump Service Providers or installing contractor.

8. Health and safety

In order to minimise the risk of ill health or accidents when installing and/or servicing pump chambers, workers must be fully trained, competent and follow the health and safety guidelines below:

- Do not work without a risk assessment being in place.
- Work in accordance with the control measures identified in the risk assessment.
- All personnel must be vaccinated against diseases to which they may be exposed to, i.e. Tetanus, Polio, Hepatitis A&B, etc.
- At the time of writing, due to there being no vaccine against leptospirosis/Weil's disease, where rats may be present, ensure appropriate personal protective equipment (skin protection) is worn and ensure any cuts or abrasions are fully covered.
- There should be no eating or drinking during works and only afterwards following a change of clothing and washing.
- Ensure electrical power to the pump is turned off/isolated before carrying out installation or maintenance.
- A suitable first aid kit must be close to hand.

9. Warranty

9.1 Standard 12-month component warranty

The Delta Dual V3 packaged pumping station is offered with a 12-month component warranty from the date of invoice. This does not include submersible pumps, which have a standard 24-month warranty (refer to Section 9.2).

Standard Delta Membrane Systems Limited conditions apply.

This warranty does not cover defects caused by incorrect installation, installation/installer error, abnormal working conditions, misuse, or neglect.

Any defects or malfunctions should be reported to Delta Membrane Systems Limited within 7 days of when the defect becomes apparent. All broken components should be returned to Delta Membrane Systems Limited at customer cost.

To make a Warranty Claim, please email pumps@deltamembranes.com. Forms are available from www.deltamembranes.com.

In no event shall Delta Membrane Systems Limited be liable for any consequential damage, penalties, loss, or expenses howsoever arising, out of or in connection with incorrect installations or misuse, including, without limitation, direct or indirect loss, consequential loss or damage, loss of profit or goodwill, loss arising from any errors or omissions in the pump chamber as a result of, incorrect installation, installation/installer error, abnormal working conditions, misuse, or neglect.

Delta Membrane Systems Limited shall not accept liability if the pumping system fails due to being incorrectly specified by any third parties not employed by Delta Membrane Systems Limited.

Delta Membrane Systems Limited shall not accept liability if the pump system fails due to discharge of inappropriate fluids/solids including, but not limited to, building debris or materials.

9.1.1 Warranty from date of commissioning

When the Delta Dual V3 packaged pumping station is commissioned by a Delta Registered Pump Service Provider, the 12-month warranty period will begin at date of commissioning, subject to:

- all services and associated systems are ready to enable commissioning to take place;
- commissioning has been undertaken within 12 months from the date of invoice;
- the Delta Dual V3 packaged pumping station is commissioned by a Delta Registered Pump Service Provider;
- the Delta Registered Pump Service Provider has logged Commissioning details of the Delta Dual V3 packaged Pumping station with Delta Membrane Systems Limited;
- the Delta Dual V3 packaged pumping station is serviced by a Delta Registered Pump Service Provider with a minimum of a yearly Service (within 12 months from the date of commissioning/last service) depending on site specifications.

9.2 Standard 24-month pump warranty

Delta V3 Pump(s) are offered with a standard 24-month warranty from date of invoice. In other respects the terms of the pump warranty are the same as the standard component warranty.

When a Delta V3 Pump is commissioned, and then serviced regularly by a Delta Registered Pump Service Provider an extended 5-year pump warranty is offered (subject to the terms and conditions).

9.2.1 Five-year extended pump warranty from date of commissioning

Delta Membrane Systems Limited will offer a 5-year extended pump warranty on the Delta V3 Pump(s) from date of commissioning, subject to:

- all services and associated systems are ready to enable commissioning to take place;
- the Delta V3 Pump(s) is commissioned within 12 months from the date of invoice;
- the Delta V3 Pump(s) is commissioned by a Delta Registered Pump Service Provider;
- the Delta Registered Pump Service Provider has logged Commissioning details of the Delta V3 pump(s) with Delta Membrane Systems Limited;
- all Delta V3 Pump(s) registered under the extended 5-year warranty must be serviced by a Delta Registered Pump Service Provider with a minimum of a yearly Service (within 12 months from the date of commissioning/last service) depending on site specifications.

10. Troubleshooting

Please ensure the installation process has been completed thoroughly and all steps have been followed correctly.

Use the table below to assist with troubleshooting and if problems still occur, please contact Delta Membranes on 01992 523 523 between 8am and 5pm, Monday to Friday or by email at info@deltamembranes.com for more information.

Fault	Cause
Water is leaking from discharge arms.	'O' rings missing or not installed correctly in unions.
	PTFE tape not applied to male irons on discharge arms when attached to pumps.
Pump isn't running.	Pump hasn't got power – check wiring with reference to section 6.0 wiring diagram.
	Float arm isn't lifting – check float arm is free moving and not catching on chamber or other pump – make sure pumps are positioned as diagram 38.
	Float arm not turning on pump – can you hear a click when lifted slowly? If not, call Delta Technical.
The pump is running but is not pumping water or is discharging very slowly (taking more than 40 seconds to empty the chamber).	Gate valve isn't open or partially closed – turn valve anticlockwise to open.
	Pump is air locked – make sure there is a level of water to the top of the pumps, remove pump from union and lower back into water, lift float arm to activate pump before reconnecting to discharge arm.
	Discharge pipe is blocked – a drainage company is required.
	Pump impeller is jammed – turn off power and isolate pump, remove pump from chamber, unscrew pump base using Torx screwdriver and free impeller. **WARNING!** **Insure mains power and pump is isolated before taking pump apart and seek advice from a qualified electrician.**
Pump is tripping.	Pump is wired incorrectly or not on a separate supply – refer to section 6.0 wiring diagram.
	Pump impeller is jammed – turn off power and isolate pump, remove pump from chamber, unscrew pump base using Torx screwdriver and free impeller. **WARNING!** **Insure mains power and pump is isolated before taking pump apart and seek advice from a qualified electrician.**
High level alarm is not functioning.	Refer to the high level alarm installation and operating instructions.

11. Ancillaries

Pressure pipe, PVC Class E, 2 m

1¼"	2"
E100	E120

Tank connector

1¼"	2"
E110	E130

90° elbow PL/PL

1¼"	2"
E101	E121

45° elbow PL/PL

1¼"	2"
E102	E122

Tee-piece PL/PL

1¼"	2"
E105	E125

Coupling (socket) PL/PL

1¼"	2"
E103	E123

Socket union PL/PL

1¼"	2"
E106	E126

Male threaded adaptor

1¼"	2"
E104	E124

Coupling PL/TH

1¼"	2"
E107	E127

Barrel nipple PL/TH

1¼"	2"
E108	E128

Barrel nipple TH/TH

1¼"	2"
E109	E129

Coupling TH/TH

1¼"	2"
E111	E131

Reducer, PL/PL

2" to 1½"

E160

Reducing bush, PL/TH

1½" x 1¼"

E161

Male iron, Polypipe

1¼" / 32 mm E112

2" / 50 mm E132

110mm saddle clamp, reinf.

1¼" E113

2" E133

Gate valve, brass

1¼" E187

2" E188

Swing check valve, brass

1¼" E191

2" E193

Non-return valve

V3/4/6

E195

110mm adaptor

1¼" E205

2" E206

Hose tail

1¼"

E198

Semi-rigid hose

32 mm / 5 m

E197

Solvent cement, WDF-05

250 ml

E175

PVC cleaning fluid

500 ml

E176

12. Drainage channel components

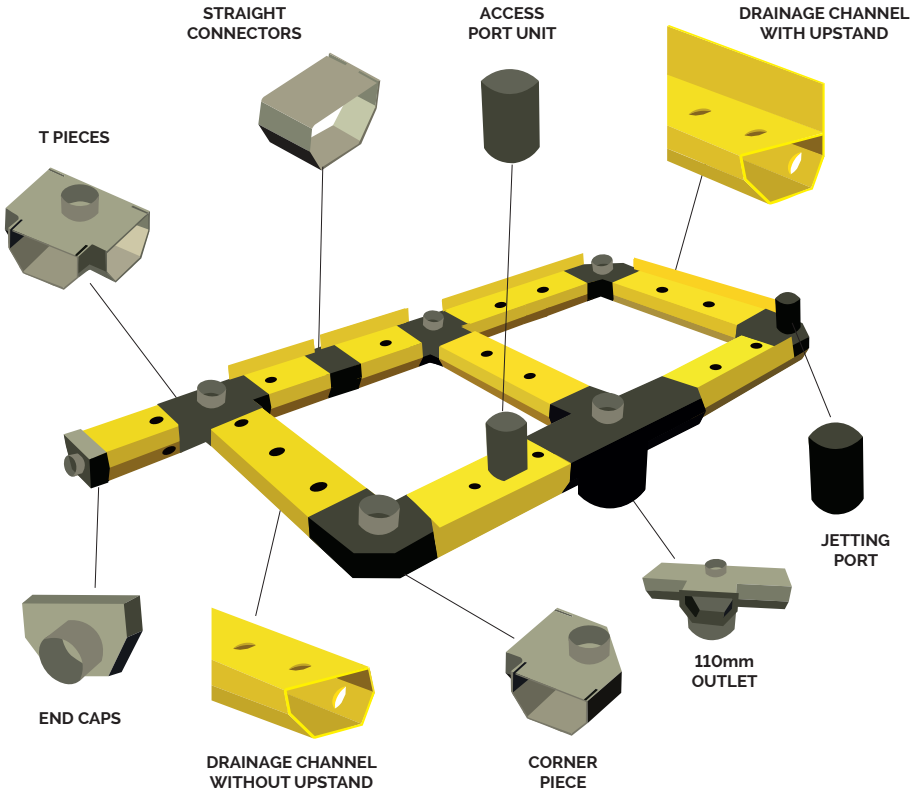

STRAIGHT CONNECTORS DMS 310

Straight Connectors for connecting Delta channel (with or without upstand). Also known as Delta "in line". The range of Delta drainage channel ancillary components make installation more efficient and quicker.

T PIECES DMS 183

T Pieces, also known as "tee connectors", facilitates crossing 3 channels together to dissect the floor or to discharge to a centrally located sump pump. The T Pieces include a "Push Out" feature for inspection port, to service the system.

END CAPS DMS 184

End Caps have a dual role and can work as either a blanking plate (at the far end of a channel run) or can be converted easily (with their "Push Out" feature) for easy fit of drainage pipe outlet (connector) to join with the sump pump station.

ACCESS PORT UNIT DMS 117

Preformed unit of Delta perimeter drainage channel with inspection port. Used to provide cleaning, inspection, and maintenance access to the Delta drainage channel system.

DRAINAGE CONNECTOR DMS 118

Drainage Connector used for connection underneath/underside of channel. Ideal for continuous waterproofing at level changes. Connects to 40mm pipe enabling drainage channel connection from below.

110mm OUTLET DMS 128

110mm Drainage Outlet is designed to join the channel to 110mm standard underground pipe. The 110mm Drainage Outlet consists of a 90° PVC bend and a PVC male coupling which is fitted to the base of Delta Channel to allow water to travel from the conduit to the water collection point (sump pump). The 110mm Drainage Outlet can also accept an inspection port and has the ability cross floor channels.

JETTING PORT DMS 094

Jetting Port is designed for use with the Delta perimeter drainage channel (with and without upstand). Jetting Port allows for maintenance, inspection and cleaning of the drainage system by using water to jet away any blockages. Typically installed at every major change of direction and/or 6/7 linear metre intervals along straight run of channel.

CORNER PIECES DMS 182

Delta "90 degree" Corner Connector with "Push Out" feature for inspection port. Can be used to join lengths of Delta channels on both internal and external corner sections.

DRAINAGE CHANNEL WITHOUT UPSTAND DMS 208

Delta Perimeter Drainage Channel is a component part used within a Type C Cavity Drainage System. Delta Channel is a distinctive yellow, PVC drainage conduit designed to manage water ingress and hydrostatic water pressure in basements and below ground structures. Channel without upstand is used where cross channels sit over construction joints in the middle of the floor, when Delta Channel is to be offset from the wall or to join two perimeter channels together across a floor.

DRAINAGE CHANNEL WITH UPSTAND DMS 207

Delta Perimeter Drainage Channel is a component part used within a Type C Cavity Drainage System. Delta Channel is a distinctive yellow, PVC drainage conduit designed to manage water ingress and hydrostatic water pressure in basements and below ground structures. Channel with upstand keeps the channel stable when abutting the Delta membrane on a perimeter wall.

13. Perimeter channel inlet template

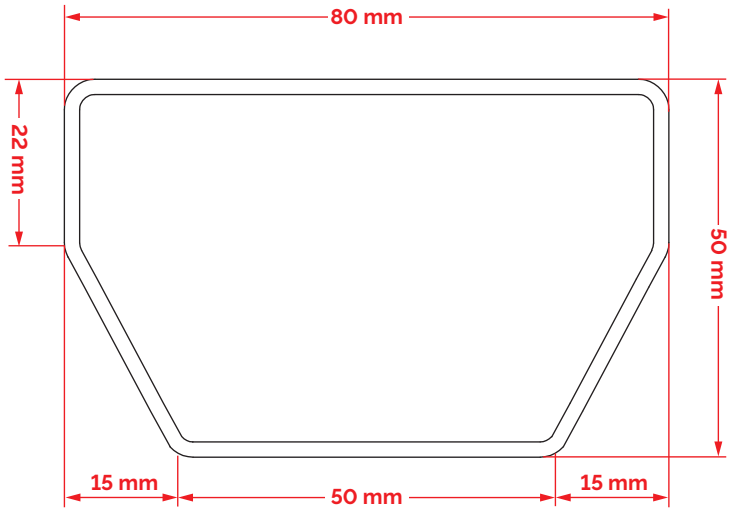

If using a printed copy as a drilling guide, print out at 100% enlargement, and check the dimensions of the printed copy before drilling.

14. Commissioning details

Property address	Commissioning engineers

Customer contact details	
Contact name	
Contact telephone	

Installation details	
Equipment installed	
Delta Registered Pump Service Provider	
Date of commissioning	
Commissioning engineer	
Signature of engineer	

Servicing plans

Sump pumps must be maintained. We recommend a qualified engineer examines and services equipment every year. Pumps running frequently due to higher water table, water drainage, or weather conditions should be examined more frequently, we recommend every 6 months. Sump pumps, being mechanical devices, may fail if not maintained which could lead to a flooded basement and costly repairs. Regular servicing of sump pumps will increase efficiency and extend the life of the pump. All Delta Membrane pump systems can be maintained and serviced by our recommended service companies or installing contractor.

Commissioning

All sump pumps require commissioning. Commissioning provides peace of mind, knowing that the system is installed correctly and in compliance with warranty conditions. All Delta Membrane pump systems can be commissioned by our recommended service companies or installing contractor.

Delta Membrane Systems Ltd, Delta House, Merlin Way, North Weald, Epping, Essex, CM16 6HR.
01992 523 523 info@deltamembranes.com www.deltamembranes.com
deltamembranes deltamembranes delta-membrane-systems-ltd deltamembranesystems

© 2024 Delta Membrane Systems Ltd. All Rights Reserved. DMS_IG_164 0724