Litter bins.

furnitubes
shaping outdoor spaces

MADE IN BRITAIN

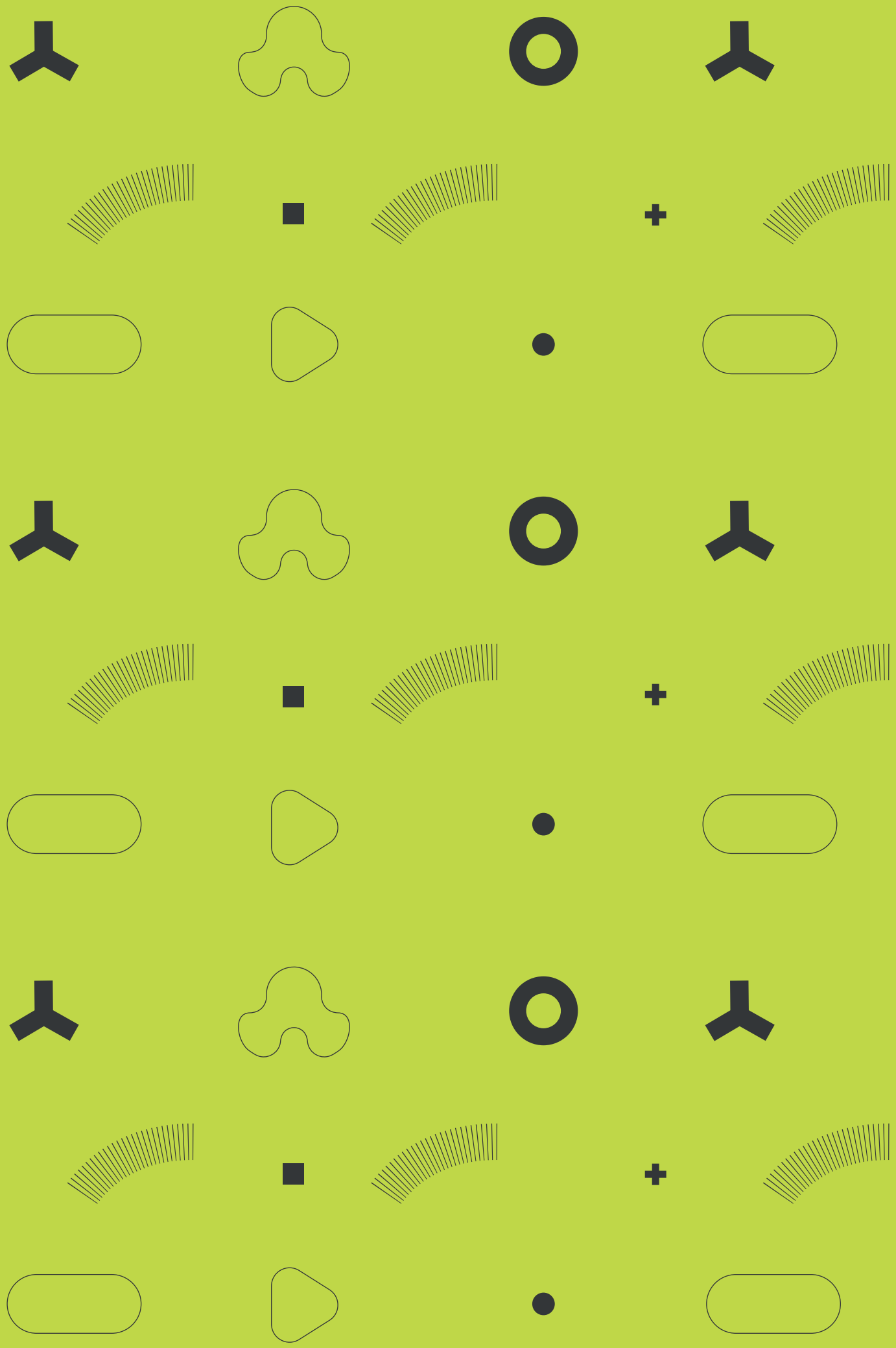

Litter bins.

It is estimated 30,000 tonnes of litter are collected from England's streets each year - enough to fill Wembley stadium 4 times over.

Thoughtfully placed litter bins transform public spaces, creating environments where cleanliness feels effortless rather than enforced. When positioned with care throughout highstreets, urban centres and parks, these essential elements of street furniture quietly encourage civic pride while supporting sustainability goals.

Our collection balances form with considered function, each design reflecting our commitment to creating urban furniture that serves communities for decades rather than years. We've simplified the selection process, offering options that complement any scheme while providing the practical durability that public spaces demand.

Browse our Litter bin range to find the best suited bin for your scheme. Need help choosing? We offer professional advice to assist your product selection. We also have CAD blocks readily available to easily specify.

Why choose a Furnitubes litter bin?

- **Crafted in the UK -** designed and manufactured in our Kent workshop, reducing carbon footprint while supporting local craftsmanship
- **Materials with meaning -** recycled steel forms the backbone of our products, chosen for longevity and minimal environmental impact
- **Considered maintenance -** intelligent design ensures components can be replaced individually, extending the product's useful life
- **Accessible quality -** thoughtfully engineered solutions that respect budgetary realities without compromising on design integrity"

A litter bin for all sites.

ARCA Range

- Interchangeable components can be **easily replaced** if damaged
- Choose from **4 stunning styles**
- Optional all-steel or with **timber-clad panels**
- Choice of **materials** and **finishes**
- **Features slam lock** and **door restraints** to prevent over-opening
- A range of convenient **customisable** options
- Tailor to **suit your budget**
- Designed and **made by us** in the **UK**

Zenith Range

- 3 sizes to choose from
- Choice of **materials** and **finishes**
- Customise with **vinyl logos, laser cut wording, cigarette stubbers** and **bird-proof flaps**
- **Freestanding, bolt-down** and **pedestal-mounted** installation
- Part of a **coordinated suite** of products
- Designed and made by us in the **UK**

Timber Range

- **2 styles** to choose from
- **Bolt-down** or **in-ground** ioptions
- Complete with **steel liner**
- Made in the **UK**

ARCA
Litter bins.

Arca is designed so that individual components that may suffer wear or damage over time (such as the lid, lock set, door rims, and body panels) can be easily replaced, avoiding the need to replace the whole bin.

Interchangeable litter bins to suit every scheme

Every element in the Arca range has been crafted to provide versatility while maintaining a beautiful visual coherence.

The all-steel variants bring architectural presence to urban developments, while timber-panelled options create a natural warmth that complements parks and landscape settings.

Every combination delivers the lasting durability that defines our approach to street furniture, with robust construction that stands the test of time, a refined aesthetic, and interchangeable components that extend the product's lifespan far beyond industry standards

Choose your shape.

Circular

Circular fronted with square back

Square

Dual compartment

ARCA Circular litter bin.

All-steel, side-opening door and steel liner

Circular litter bin, standard base for surface-mounted installation

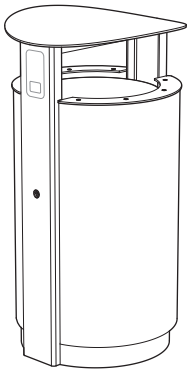

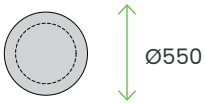

Ø550MM X 1040MM HIGH

ARC5

Circular litter bin with square-faced rear, standard base for surface-mounted installation

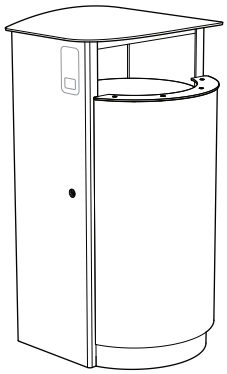

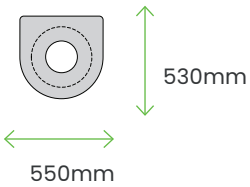

550MM WIDE X 530MM DEEP X 1040MM HIGH

ARC5F

Dual compartment round-ended litter bin, standard base for surface-mounted installation

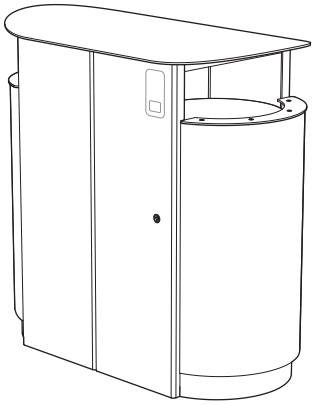

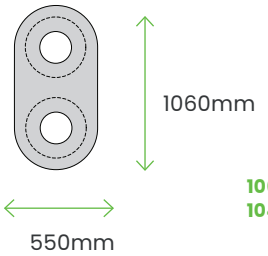

1060MM LONG X 550MM WIDE X 1040MM HIGH

ARC5D

ARCA Circular litter bin.

steel with timber slats, side-opening and steel liner

Circular litter bin,standard base for surface-mounted installation

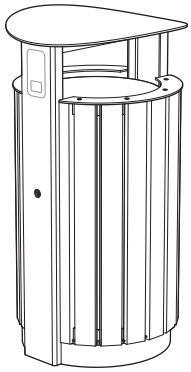

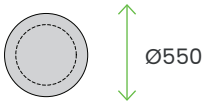

Ø550MM X 1040MM HIGH

ARC5T

Circular litter bin with square-faced rear, standard base for surface-mounted installation

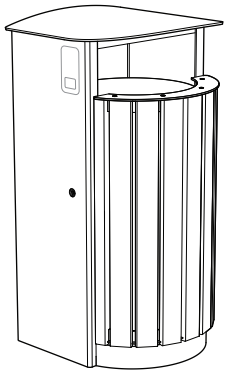

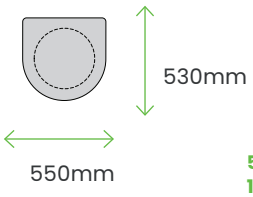

550MM WIDE X 530MM DEEP X 1040MM HIGH

ARC5FT

Dual compartment round-ended litter bin, standard base for surface-mounted installation

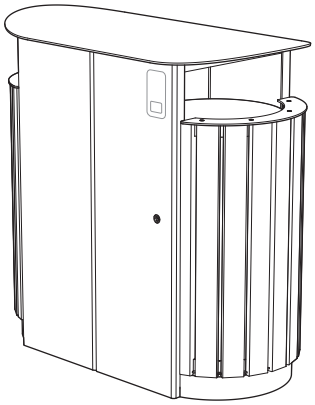

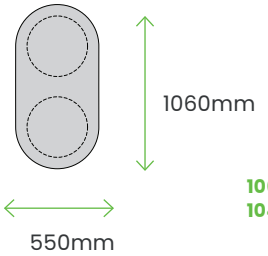

1060MM LONG X 550MM WIDE X 1040MM HIGH

ARC5DT

ARCA Square litter bin.

all-steel, side-opening and steel liner

Square litter bin with apertures to both sides, standard base for surface-mounted installation

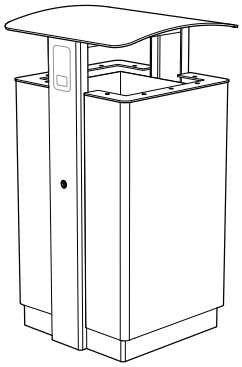

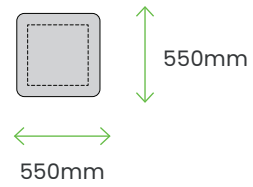

550MM SQUARE X 1040MM HIGH

ARC8

Square litter bin with front face aperture only, standard base for surface-mounted installation

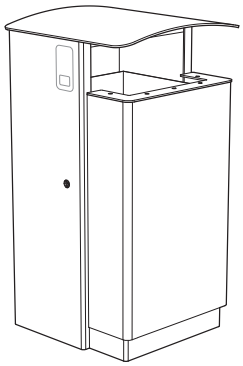

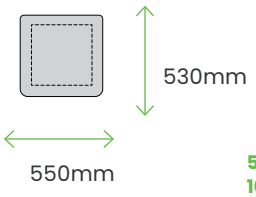

550MM WIDE X 530MM DEEP X 1040MM HIGH

ARC8F

Dual compartment square-ended litter bin, standard base for surface-mounted installation

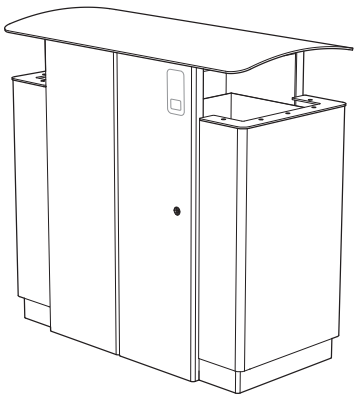

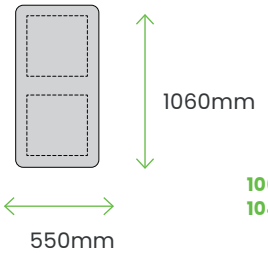

1060MM LONG X 550MM WIDE X 1040MM HIGH

ARC8D

ARCA Circular litter bin.

steel with timber slats, side-opening with lid

Square litter bin with apertures to both sides, standard base for surface-mounted installation

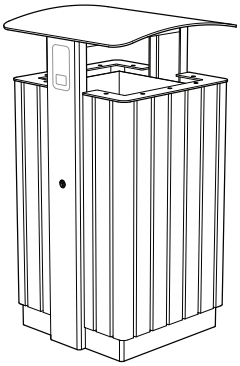

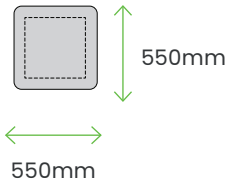

550MM SQUARE X 840MM HIGH

ARC8T

Square litter bin with front face aperture only, standard base for surface-mounted installation

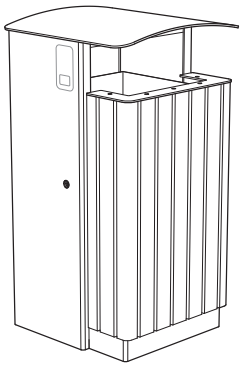

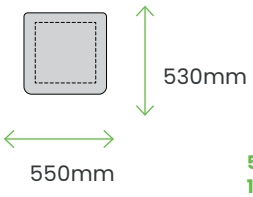

550MM WIDE X 530MM DEEP X 1040MM HIGH

ARC8FT

Dual compartment square-ended litter bin, standard base for surface-mounted installation

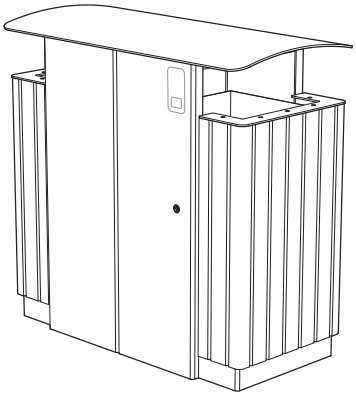

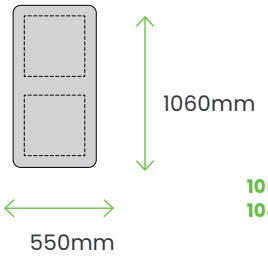

1060MM LONG X 550MM WIDE X 1040MM HIGH

ARC8DT

Extras.

- Cigarette stubber and ash waster liner
- Vinyl logo (steel version)
- Timber clad body
- “LITTER” and “RECYCLING” options

Materials & finishes

- Steel - polyester powder coated finish to standard RAL colour
- Iroko timber slats with the option to add a UV protective finish

Installation.

Surface mounted

Where the ground onto which the litter bin is to be installed is reasonably level and offers a good base into which to fix ground anchors, we recommend using the standard version of the bin which has a wide base plate built into its base. Bins should be bolted down using the 4 fixing holes in the base for M10 or M12 ground fixings (not supplied).

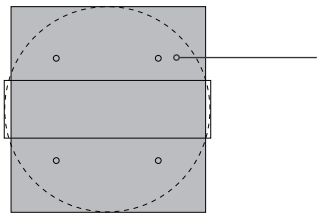

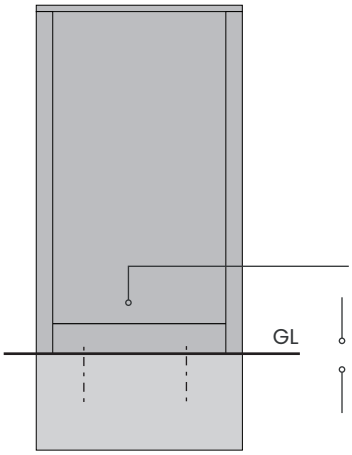

Zenith Litter bins.

The Zenith® collection adapts to the unique character of any site while maintaining its distinct design language. We've developed a complete matrix of sizes, materials, finishes, and installation approaches that allows for customisation without compromise.

Stylish, strong and durable

As standard all bins feature an integral lid to prevent rainwater ingress, and a side-opening door fitted with a positive engagement slam lock and operated by a simple tri-lock.

Zenith bins are offered in 2 different sizes for the surface-mounted version for level sites or fitted to a short pedestal for below ground fixing that suits sloped sites.

The entire range is available in a steel construction with a polyester powder coated finish, in grades 304 or 316 stainless steel in a satin or bright polished finish.

On surface-mounted versions a rodent bait tray is a standard feature and further options across the range include cigarette stubber plates, independent ash waste liners, and a variety of options for graphic displays of the bin's function and / or corporate branding.

Zenith
Litter bin range.

ZENITH bolt-down
for surface mounting

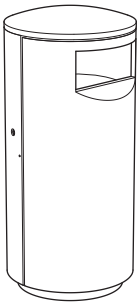

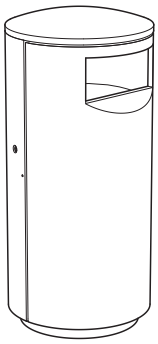

Ø500MM X 1100MM HIGH LINER CAPACITY 90 LITRES	ZEN500
Ø540MM X 1240MM HIGH LINER CAPACITY 125 LITRES	ZEN520

ZENITH pedestal
for in-ground installation

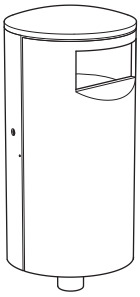

Ø500MM X 1130MM HIGH LINER CAPACITY 80 LITRES	ZEN580

Extras.

- Cigarette stubber and ash waste liner
- Laser cut wording “RECYCLING” or “LITTER”
- Vinyl “MIXED RECYLING”

Materials & finishes

- Steel - Triple Process powder coated finish to a choice of 3 standard RAL colours
- Stainless steel - G304 satin polished
- Stainless steel - G316 satin polished

Installation.

Surface mounted

The solid base version of this Zenith litter bin is best suited to installation on truly level ground and offers the benefit of inclusion of a rodent bait tray as standard. Where the ground is sloping, the pedestal-mounted version is the better solution, as it is installed to a below ground foundation pad which allows for the bin to be installed upright, so that the door opens in a horizontal plane.

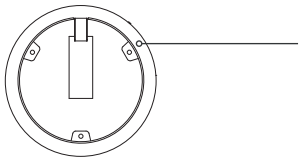

Bolt bin down to substrate using 3 no. suitable M10 or M12 ground fixings (not supplied)

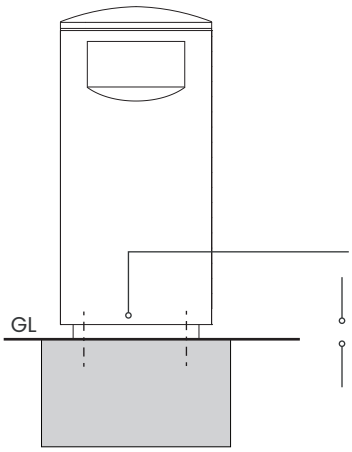

Lower edge of door

50mm typical clearance between underside of door and base of bin

Pedestal mounted

Where the ground onto which the litter bin is to be installed is not level, we recommend using the pedestal-mounted versions of the Zenith litter bin. The pedestal should be firmly secured in a suitable concrete foundation block, ensuring that there is adequate clearance (recommended 25mm minimum) above the ground at its highest point to allow free passage of the door. Extra-long pedestals can be supplied if necessary, or with a baseplate for bolting to a below ground level foundation.

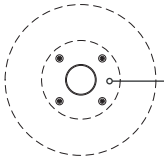

Set pedestal in to suitable concrete foundation block

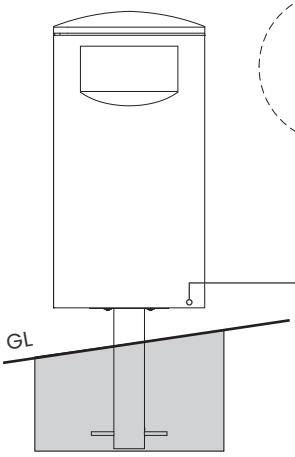

Lower edge of door

500mm pedestal root depth (nominally 150mm gap between underside of bin and ground level, and 350mm embedment in concrete foundation)

Timber Litter bins.

Natural, economical waste solutions

Our timber litter bins bring natural warmth to public spaces, creating a visual connection between urban infrastructure and landscape elements. The simplicity of these designs balances functionality with beauty and each bin offers a generous 80-litre capacity housed within a hard-wearing structure. The combination of sustainably sourced timber with robust steel liners allow our bins to age gracefully while providing the resilience necessary for daily use.

Timber Litter bins.

Boston in-ground

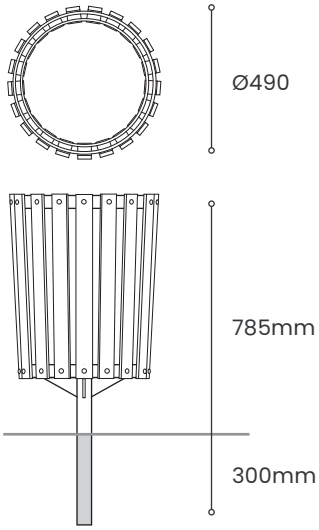

Ø490MM X 785MM (A/G)
CAPACITY 80 LITRES

BOS 490 T

Boston bolt-down

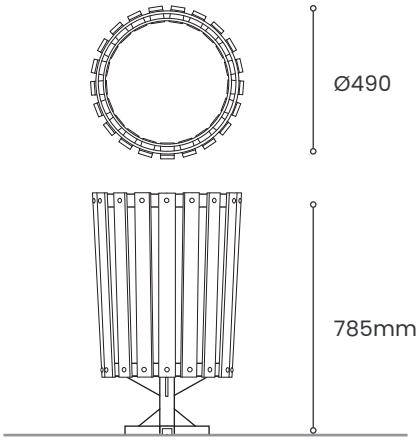

Ø490MM X 785MM
CAPACITY 80L

BOS490 TB

Materials.

- Steel - frame in black plastic coated finish
- Steel - galvanised finish
- Iroko timber slats with Sadolin stain
- All steel

Installation.

In-ground

Set in concrete block, 300 x 300mm plan x 350mm deep

Bolt-down

- Boston - 4 no. fixing holes for M8 ground anchors (not supplied)

Why Furnitubes.

- **Made in the UK**
  our factory is based in Kent, so expect faster leadtimes and no supply chain delays
- **Easy to maintain + low labour costs**
  we make sure that fixing points are easily accessible so slats and brackets can be changed easily when damaged
- **Modular solutions**
  our ranges are modular and customisable, seating and planters can be easily combined, be creative without blowing the budget
- **Our approach**
  we take a considered approach to design, it's not just about the end product. We take everything in the process into consideration, we are collaborative and we are committed to producing products that improve our environment & keep people safe.

Our Process.

- **Get in touch** – it's as simple as that, give us a call or drop us an email, we're happy to help whatever the medium!
- **Collaborate** - Depending on your needs, you might not actually need us at this stage, that's the beauty of our modular ranges – they're designed with you in mind, so you can specify with ease. Nevertheless, we are here for you if you do – our design team are always on hand to discuss the nitty gritty of your project.
- **Specification** – This is where our team of experts take the wheel and help you with sketches, CADs and more to help you specify our products as easily as possible.
- **Production + delivery** – all of our products are designed and manufactured in the UK allowing us to give you shorter lead times. With a dedicated project manager keeping you in the loop, you can trust everything is in hand.

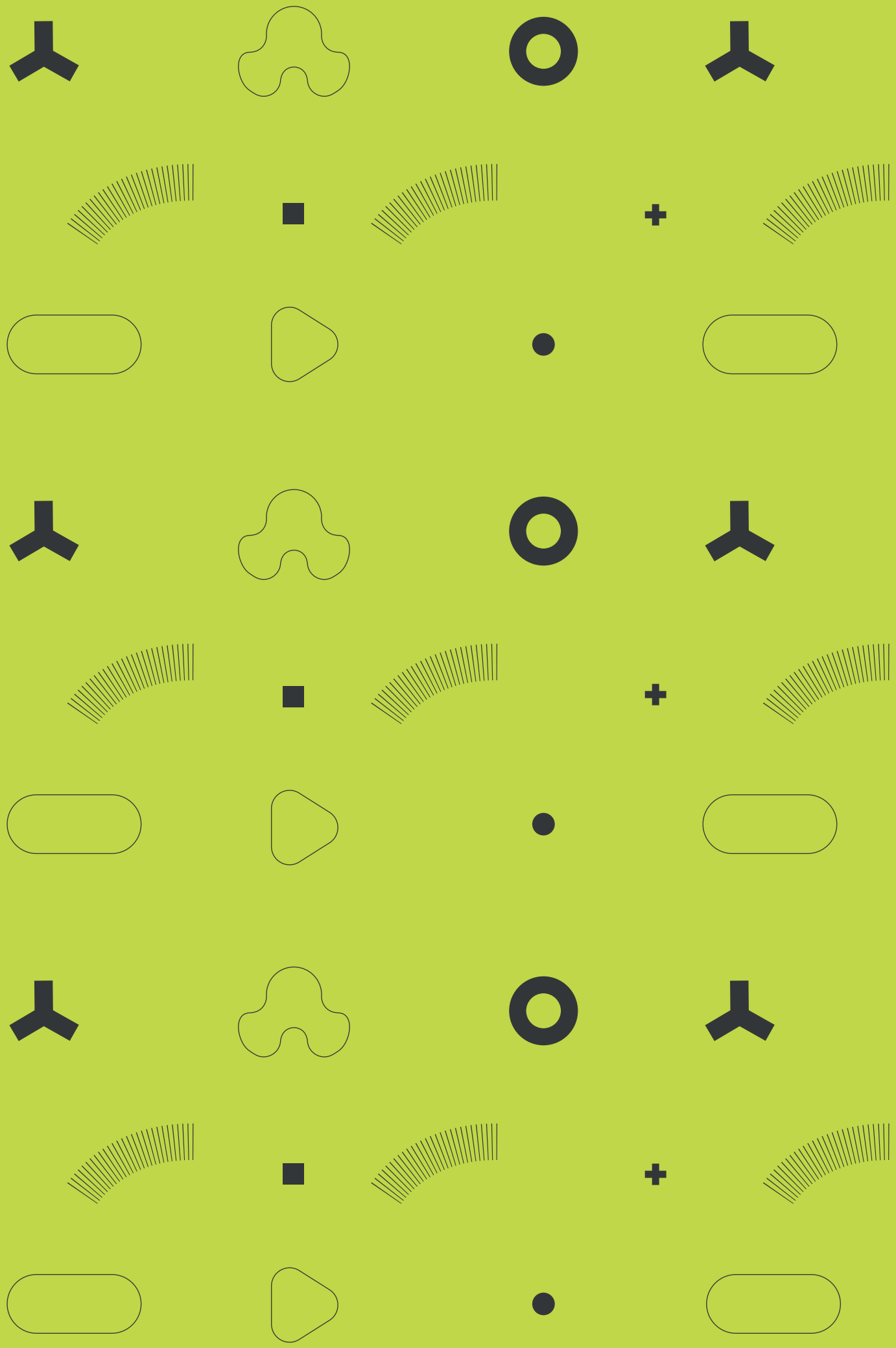

Furnitubes Furnitubes Furnitubes International UK

furnitubes
shaping outdoor spaces

T: +44 (0)20 8378 3200
E: sales@furnitubes.com
www.furnitubes.com