SYSTEMS

JUNE 2022

Masonry Products

Non-combustible Windposts and Cavity Tray Systems designed to increase safety and improve standards

BA SYSTEMS

Cavity Trays

Scan QR Code to view full product range on our website!

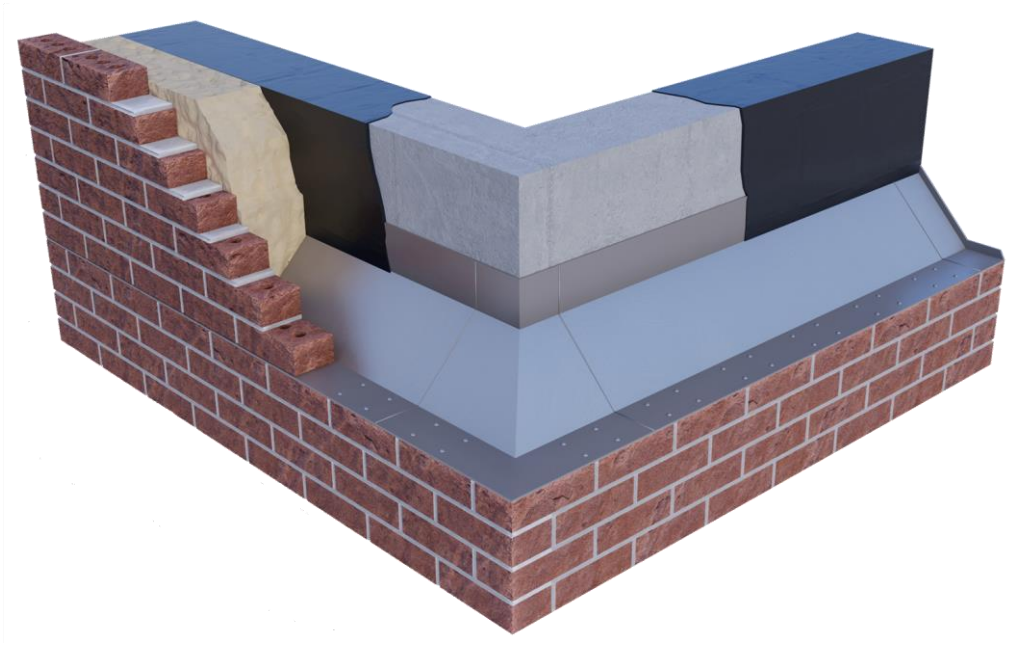

CAVITY TRAY CREDENTIALS

> Fully **A1 rated** to comply with the Approved Document B 2019 amendments

> Designed with a **thermal break isolator** to prevent cold bridging in the **cavity wall**

> Full design and scheduling service included as standard. Product **cut and manufactured** to schedule to facilitate fast site installation

> Unique **mottled design** on the base of the cavity tray to provide greater adhesion to the **stainless tray**

> Corner joints and details are all **pre-fabricated** to suit the schedule and prior to delivery on site.

> Available on 3–4-week lead times, subject to a review of project requirements

Supplying bespoke **A1 non-combustible** stainless steel cavity trays for **construction projects** in line with the 2018 **government ban** on the use of combustible materials for buildings over 18m.

Cavity Tray Components

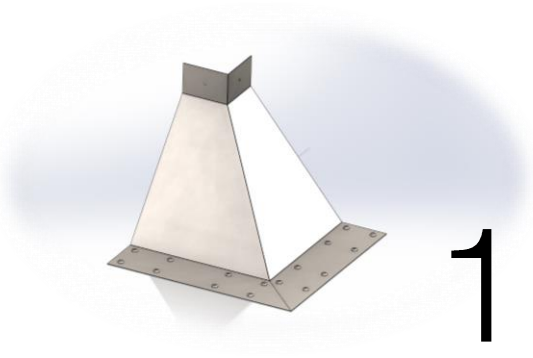

1

External Corners

External Corners are fully fabricated stainless-steel corners which are installed as starting points for the whole cavity tray system.

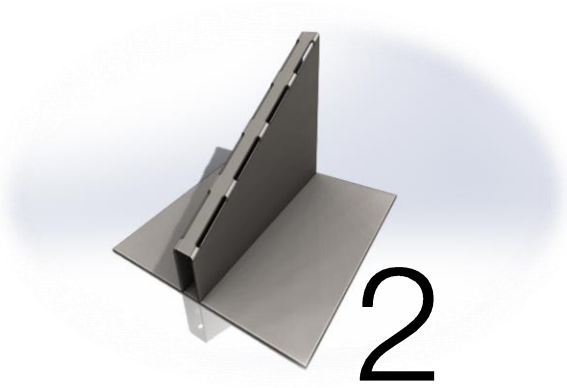

2

Weep Vents

Weep Vents are fully fabricated non-combustible vents which need to be incorporated into the design. Weep vents should be place 225mm from the inside of the stop ends and at 450mm centers thereafter.

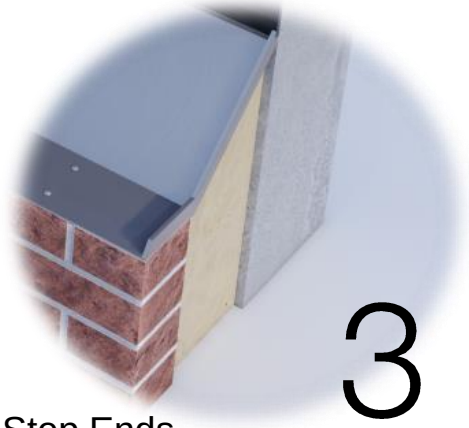

3

Stop Ends

Stop Ends provide a watertight seal above door or window openings and ends of cavity tray runs.

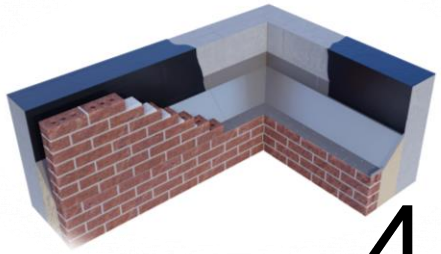

4

Bespoke Corners and Joints

Bespoke Corners can be designed and prefabricated for special applications.

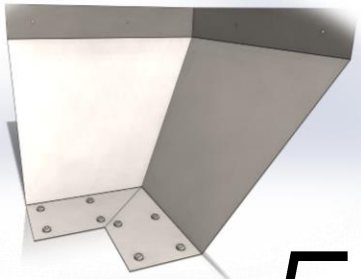

5

Internal Corners

Internal Corners are fully fabricated stainless-steel corners which are installed as starting points for the whole cavity tray system.

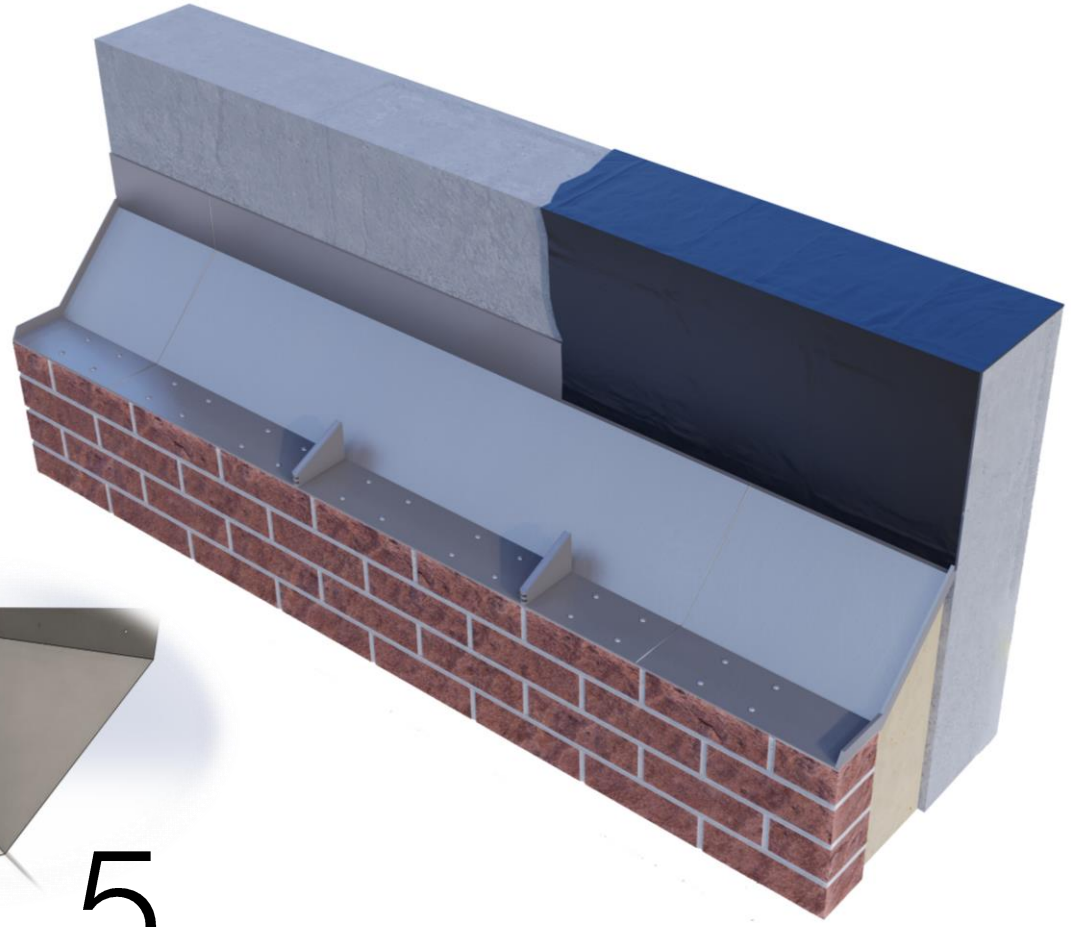

BA SYSTEMS

Windposts

Scan QR Code to view full product range on our website!

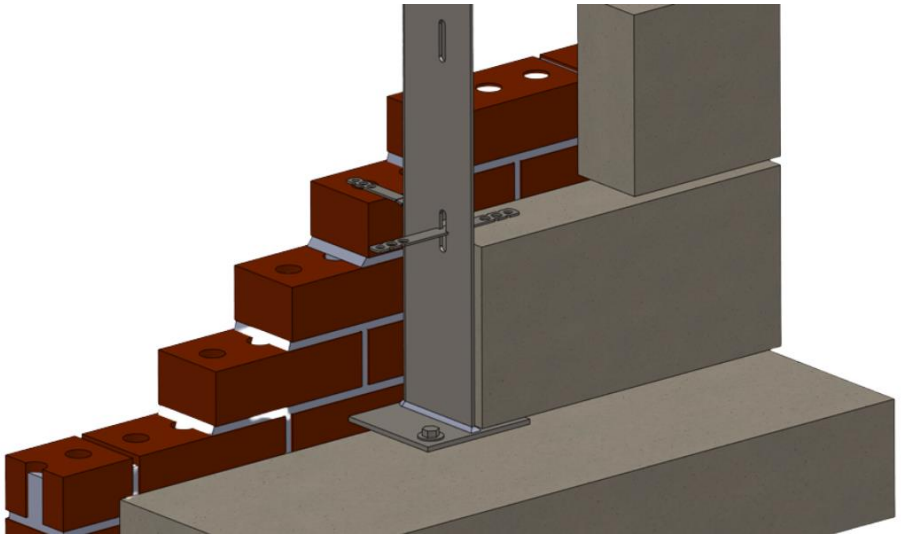

WINDPOST CREDENTIALS

> Fully **A1 rated** to comply with the Approved Document B 2019 amendments

> Supplied complete with the appropriate fixing packs for simple on-site installation

> Full design and scheduling service included as standard. Product **cut and manufactured** to schedule to facilitate fast site installation

> Full structural calculations provided where required, ensuring full compliance

> Available on 3–4-week lead times, subject to a review of project requirements

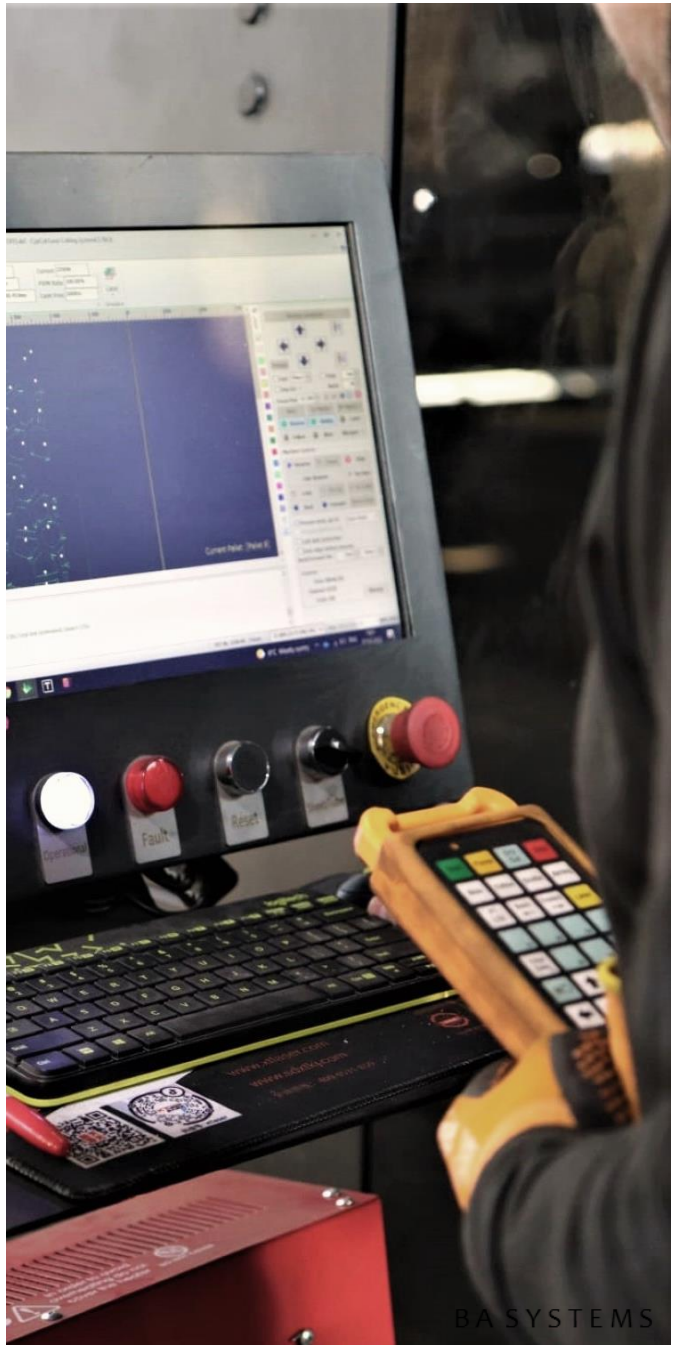

Stainless steel mild steel wind posts for structural **facades** and **brick walls**. Typically used to span vertically between floors of a building to provide **additional structural strength** to a wall where wind loads need to be accounted for.

Windpost Profiles

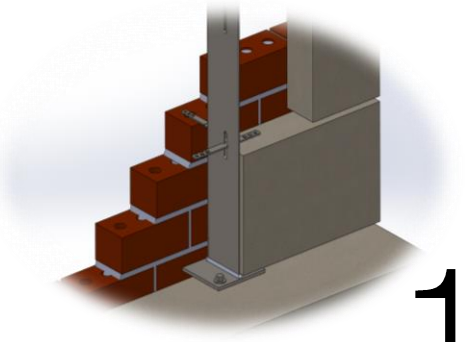

1

L-Profile Windposts

Angle profile wind posts are used where there is a small cavity to the wall and one leg of the angle is built into the blockwork and is effective where high wind loads are allowed for.

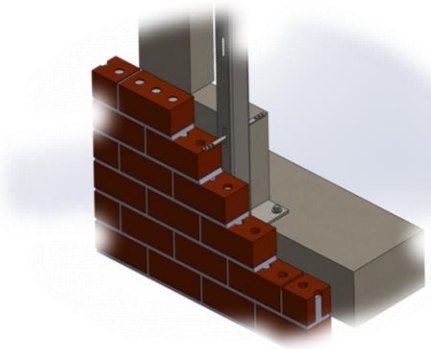

2

C-Profile Windposts

A C-Profile wind post is designed to be installed or concealed in the cavity of a wall. The slotted holes allow for simple attachment of the brick ties to be built into the blockwork.

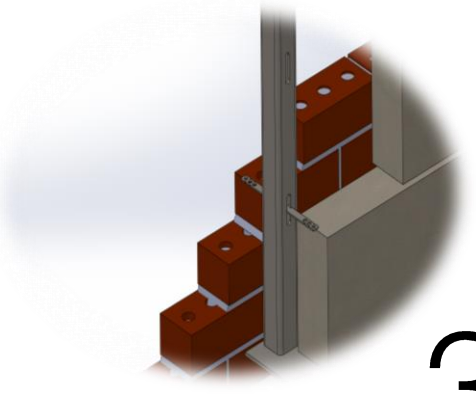

3

Box-Profile Windposts

Box profile wind posts are generally designed to be fitted in line with a single block wall with brick ties fixed to the box section and built into the block coursing.

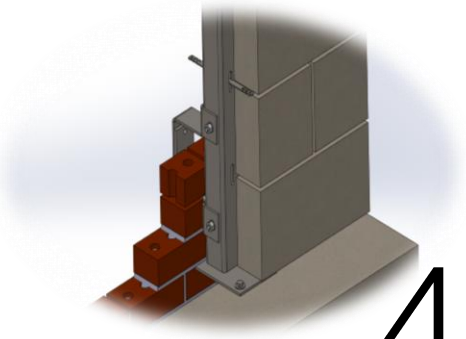

4

Parapet Windposts

These posts are designed and engineered differently to standard wind posts in that the posts are cantilevered instead of being fixed at both ends vertically.

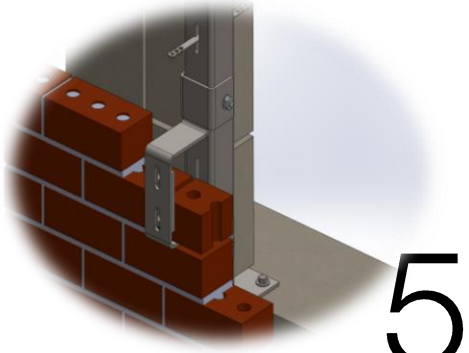

5

Parapet & Balustrade Windposts

There is often a requirement for a low-level brick parapet with aluminium or stone copings with a low-level balustrade in glass or steel to provide protection to the edge of the terrace or balcony to a minimum of 1100mm from the finished floor.

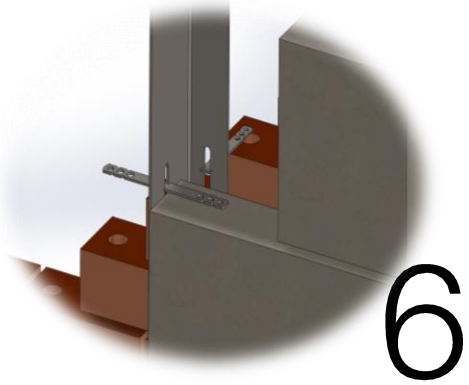

6

Masonry Ties

Stainless steel wall ties to connect with BA Windposts.

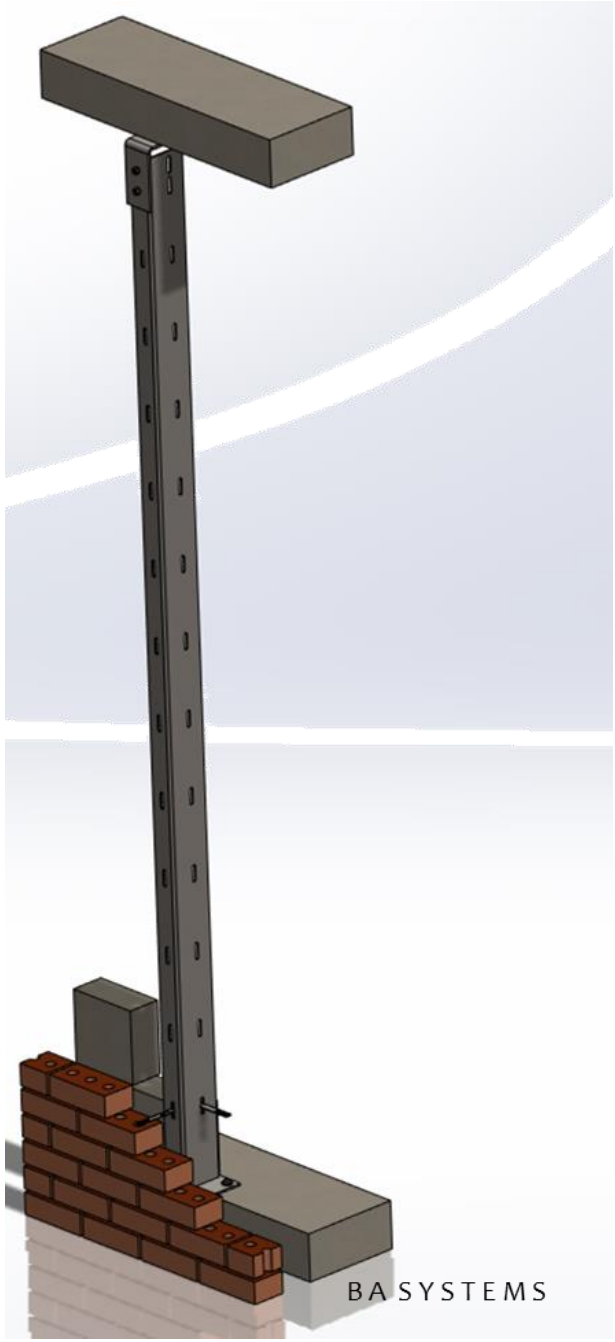

Masonry Support Bracket

SUPPORT BRACKET CREDENTIALS

> Full design and scheduling service included as standard. Product **cut and manufactured** to schedule to facilitate fast site installation

> Fully **Designed** to exact dimensions, structural calculations provided where required

> Unique Spiral Lock with vertical and horizontal adjustment

> Available on 3–4-week lead times, subject to a review of project requirements

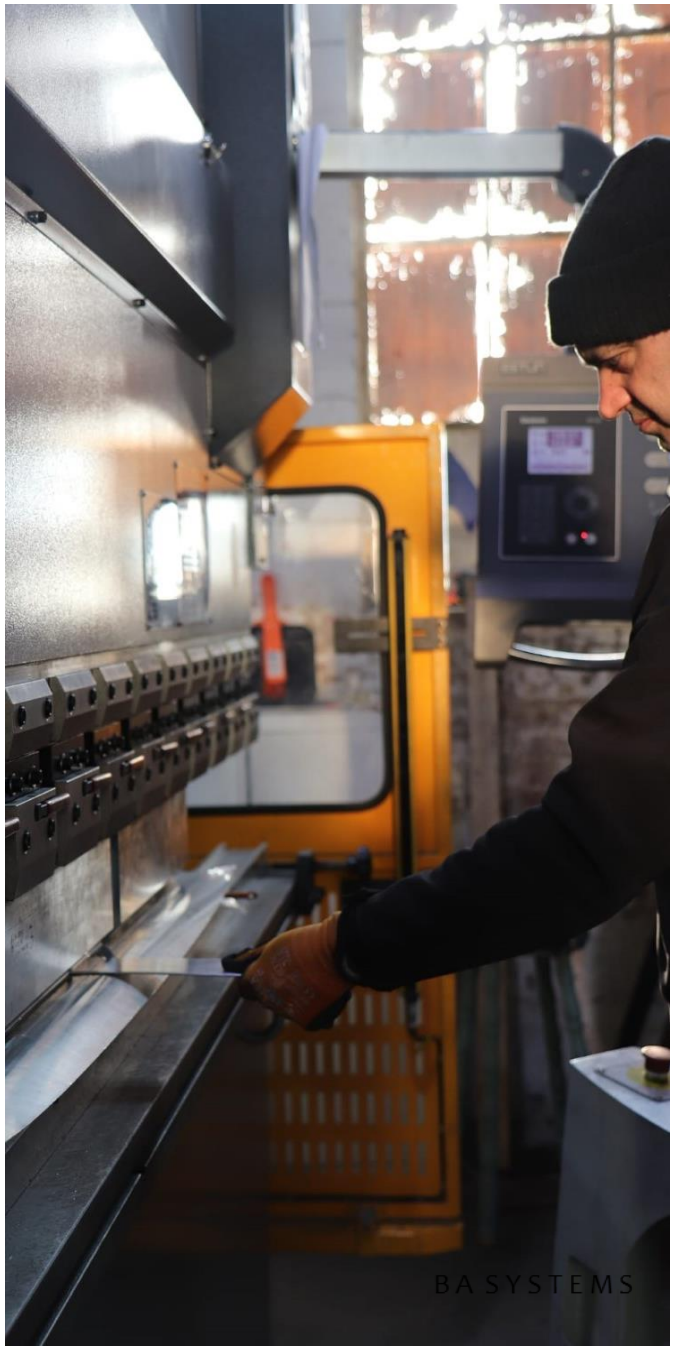

Stainless Steel Masonry Support Systems for Brick, block or stone cladding on steel or concrete framed structures.

Get in touch

For product information, or to discuss your project please **get in touch today:**

Call +44 (0) 1603 722 330
Email info@basystems.co.uk

© Brass Age Ltd 2022. All rights reserved.
BA Systems is a registered trademark of Brass Age Ltd

SYSTEMS